www.r6-ru4montesecchieta.it

IZ5CCV

ICOM

SERVICE MANUAL

UHF FM TRANSCEIVER

IC-4008A

LPD FM TRANSCEIVER

IC-4008MKII

Icom Inc.

INTRODUCTION

This service manual describes the latest service information for the **IC-4008A/IC-4008MKⅡ** at the time of publication.

MODEL	VERSION	SYMBOL	BODY COLOR
IC-4008MKⅡ	Italy	ITA	BLACK
		ITA-1	YELLOW
IC-4008A	C.S.America	CSA	BLACK
		CSA-1	YELLOW

To upgrade quality, all electrical or mechanical parts and internal circuits are subject to change without notice or obligation.

DANGER

NEVER connect the transceiver to an AC outlet or to a DC power supply that uses more than 5 V. Such a connection could cause a fire hazard and/or electric.

DO NOT expose the transceiver to rain, snow or any liquids.

DO NOT reverse the polarities of the power supply when connecting the transceiver.

DO NOT apply an RF signal of more than 20 dBm (100mW) to the antenna connector. This could damage the transceiver's front end.

ORDERING PARTS

Be sure to include the following four points when ordering replacement parts:

1. 10-digit order numbers
2. Component part number and name
3. Equipment model name and unit name
4. Quantity required

<**SAMPLE ORDER**>

0910049951	PCB B-5109B	IC-4008A	MAIN UNIT	5 pieces
8810009780 Screw	PH BO M2x6 ZK	IC-4008A	Chassis	10 pieces

Addresses are provided on the inside back cover for your convenience.

REPAIR NOTES

1. Make sure a problem is internal before disassembling the transceiver.
2. **DO NOT** open the transceiver until the transceiver is disconnected from its power source.
3. **DO NOT** force any of the variable components. Turn them slowly and smoothly.
4. **DO NOT** short any circuits or electronic parts. An insulated turning tool **MUST** be used for all adjustments.
5. **DO NOT** keep power ON for a long time when the transceiver is defective.
6. **DO NOT** transmit power into a signal generator or a sweep generator.
7. **ALWAYS** connect a 30 dB to 40 dB attenuator between the transceiver and a deviation meter or spectrum analyzer when using such test equipment.
8. **READ** the instructions of test equipment thoroughly before connecting equipment to the transceiver.

TABLE OF CONTENTS

SECTION 1 SPECIFICATIONS

SECTION 2 INSIDE VIEWS

SECTION 3 DISASEMBLY INSTRUCTION

SECTION 4 CIRCUIT DESCRIPTION

4-1 RECEIVER CIRCUITS 4-1
4-2 TRANSMITER CIRCUITS 4-2
4-3 PLL CIRCUITS 4-2
4-4 POWER SUPPLY CIRCUITS 4-3
4-5 PORT ALLOCATIONS 4-3

SECTION 5 ADJUSTMENT PROCEDURES

5-1 PREPARATION 5-1
5-2 ADJUSTMENT 5-2

SECTION 6 PARTS LIST

SECTION 7 MECHANICAL PARTS AND DISASSEMBLY

7-1 CABINET PARTS 7-1
7-2 ACCESSORIES 7-1

SECTION 8 SEMI-CONDUCTOR INFORMATION

SECTION 9 BOARD LAYOUTS

9-1 MAIN UNIT 9-1
9-2 RF UNIT 9-5

SECTION 10 BLOCK DIAGRAM

SECTION 11 VOLTAGE DIAGRAM

11-1 MAIN UNIT 11-1
11-2 RF UNIT 11-2

SECTION 1 SPECIFICATIONS

		[ITA], [ITA-1]	[CSA], [CSA-1]
GENERAL	Number of channels	69 channel (simplex; 433.075–434.775)	
	Type of emission	16K0F3E	
	Frequency stability	±2500 Hz (±5.7 ppm)	
	Frequency resolution	25 kHz	
	Power supply requirements (negative ground)	3 × AA(R6) dry, alkaline;or optional BP-202	
	Current drain	less than 140 mA	less than 500 mA
	Operating temperature range	–10˚C to +55˚C (–14˚F to +122˚F)	
	Number of CTCSS frequency	38 (67.0–250.3 Hz)	
	Dimensions (proj. not included)	55.5(W) × 102.5(H) × 26.5(D) mm 2 3/16(W) × 4 1/32(H) × 1 1/32(D) inch	
	Weight (included 3 cells)	180 g; 7.8 oz	
TRANSMITTER	Output power	10 mW	500 mW
	Modulation system	Variable reactance frequency modulation	
	Max. freqequency deviation	±5.0 kHz	
	Spurious emissions	0.25 µW	–40 dB 50 µW
	Adjacent channel power	more than 47 dB	
	External mic.connector	3-conductor 2.5(d) mm/2.2 kΩ	
RECEIVER	Receiving system	Double conversion superheterodyne	
	Intermediate frequency	1st: 21.7 MHz 2nd: 450 kHz	
	Sensitivity (12 dB SINAD)	0.2 µV ;–14 dBµ	
	Adjacent channel selectivity	more than 40 dB	
	Spurious response	more than 40 dB	
	Intermoduration	more than 40 dB	
	Audio output power	100 mW at 10% distortion with an 8 Ω load	
	External SP connector	2-conductor 3.5 (d) mm (1/8")/8 Ω	

All stated specifications are subject to change without notice or obligation.

■ CHANNEL FREQUENCY LIST

Channel No.	Frequency (MHz)	Channel No.	Frequency (MHz)	Channel No.	Frequency (MHz)
1	433.0750	24	433.6500	47	434.2250
2	433.1000	25	433.6750	48	434.2500
3	433.1250	26	433.7000	49	434.2750
4	433.1500	27	433.7250	50	434.3000
5	433.1750	28	433.7500	51	434.3250
6	433.2000	29	433.7750	52	434.3500
7	433.2250	30	433.8000	53	434.3750
8	433.2500	31	433.8250	54	434.4000
9	433.2750	32	433.8500	55	434.4250
10	433.3000	33	433.8750	56	434.4500
11	433.3250	34	433.9000	57	434.4750
12	433.3500	35	433.9250	58	434.5000
13	433.3750	36	433.9500	59	434.5250
14	433.4000	37	433.9750	60	434.5500
15	433.4250	38	434.0000	61	434.5750
16	433.4500	39	434.0250	62	434.6000
17	433.4750	40	434.0500	63	434.6250
18	433.5000	41	434.0750	64	434.6500
19	433.5250	42	434.1000	65	434.6750
20	433.5500	43	434.1250	66	434.7000
21	433.5750	44	434.1500	67	434.7250
22	433.6000	45	434.1750	68	434.7500
23	433.6250	46	434.2000	69	434.7750

■CTCSS FREQUENCY LIST

Channel No.	Frequency (Hz)	Channel No.	Frequency (Hz)	Channel No.	Frequency (Hz)
1	67.0	14	107.2	27	167.9
2	71.9	15	110.9	28	173.8
3	74.4	16	114.8	29	179.9
4	77.0	17	118.8	30	186.2
5	79.7	18	123.0	31	192.8
6	82.5	19	127.3	32	203.5
7	85.4	20	131.8	33	210.7
8	88.5	21	136.5	34	218.1
9	91.5	22	141.3	35	225.7
10	94.8	23	146.2	36	233.6
11	97.4	24	151.4	37	241.8
12	100.0	25	156.7	38	250.3
13	103.5	26	162.2	---	OFF

SECTION 2 INSIDE VIEWS

● MAIN UNIT

TOP VEIW

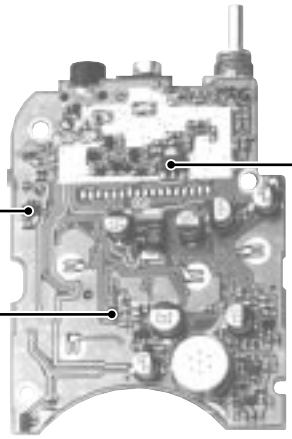

BOTTOM VEIW

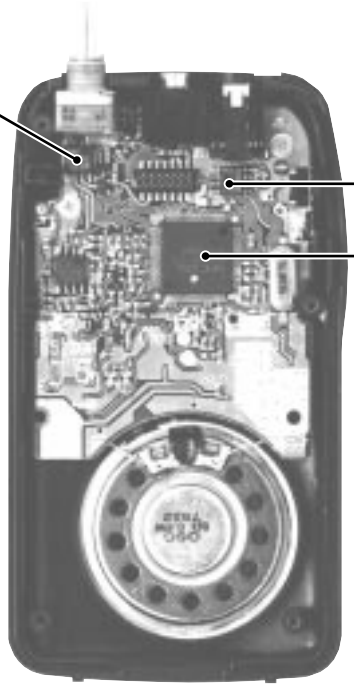

● RF UNIT

TOP VIEW

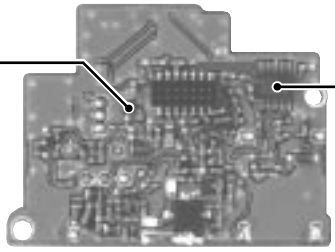

BOTTOM VIEW

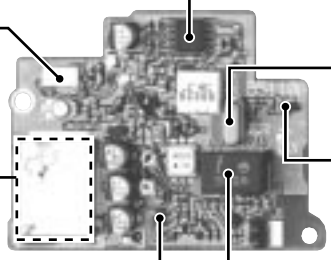

SECTION 3 DISASEMBLY INSTRUCTIONS

● REMOVING THE REAR PANEL

① Unscrew 1 screw Ⓐ, and 4 screws Ⓑ.

② Remove the rear panel in the direction of the arrow.

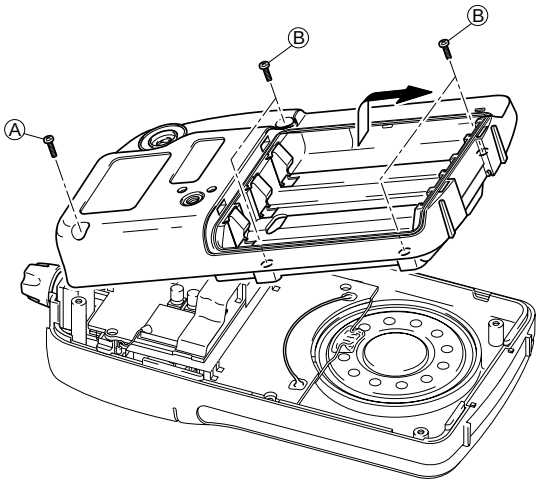

● REMOVING THE MAIN UNIT

① Unscrew 2 screws, Ⓕ.

② Remove the PTT rubber, Ⓖ.

③ Unsolder 2 points, Ⓗ, and remove the MAIN unit.

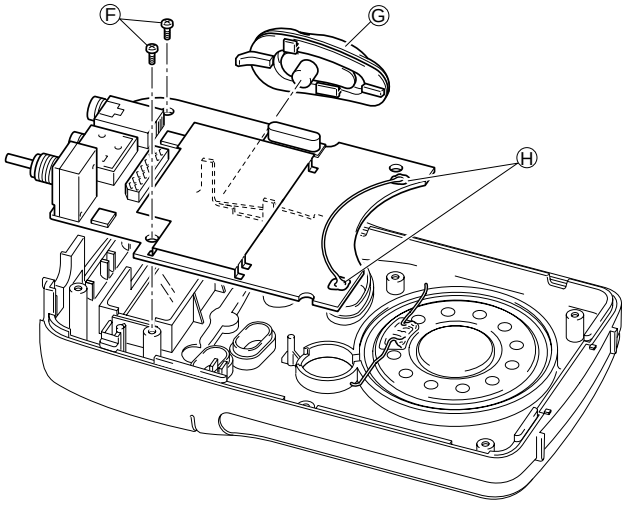

● REMOVING THE RF UNIT

① Remove 1 knob, Ⓒ, and unscrew 1 nut, Ⓓ.

② Unsolder 1 point, Ⓔ, and then remove the RF unit.

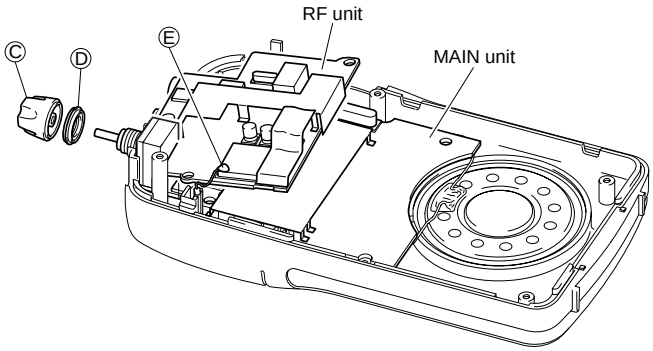

SECTION 4 CIRCUIT DESCRIPTION

4-1 RECEIVER CIRCUITS

4-1-1 ANTENNA SWITCHING CIRCUIT (RF UNIT)

Received signals from the antenna connector are passed through the low-pass filter (L5, L6, C8–C12). The filtered signals are applied to the λ/4 type antenna switching circuit (D7, D101, D102, L4, L206, C209, C210).

The antenna switching circuit functions as a low-pass filter while receiving. However, its impedance becomes very high while D101 and D102 are turned ON (while transmitting). Thus transmit signals are blocked from entering the receiver circuits. The passed signals are then applied to the RF amplifier circuit.

4-1-2 RF CIRCUIT (RF UNIT)

The RF circuit amplifies signals within the range of frequency coverage and filters out-of-band signals.

The signals from the antenna switching circuit are amplified at the RF amplifier (Q3) and passed through the bandpass filter (FI1) to suppress out-of-band signals. The filtered signals are applied to the 1st mixer circuit (Q2).

4-1-3 1st MIXER AND 1st IF CIRCUITS (RF UNIT)

The 1st mixer circuit converts the received signals to a fixed frequency of the 1st IF signal with a PLL output frequency. By changing the PLL frequency, only desired signals will be passed through a crystal filter at the next stage of the 1st mixer.

The signals from the bandpass filter are mixed at the 1st mixer circuit (Q2) with a 1st LO signal coming from the VCO circuit to produce a 21.7 MHz 1st IF signal.The 1st IF signal is applied to a crystal filter (FI2) to suppress out-of-band signals. The filtered 1st IF signal is applied to the IF amplifier (Q1), then applied to the 2nd mixer circuit (IC2, pin 16).

4-1-4 2nd MIXER AND DEMODULATOR CIRCUITS (RF UNIT)

The 2nd mixer circuit converts the 1st IF signal to a 2nd IF signal. A double conversion superheterodyne system (which converts receive signals twice) improves the image rejection ratio and obtains stable receiver gain.

The 1st IF signal from the IF amplifier (Q1) is applied to the 2nd mixer section in the FM IF IC (IC2, pin 16), and is mixed with the 2nd LO signal to be converted into a 450 kHz 2nd IF signal.

The FM IF IC contains a 2nd mixer, quadrature detector, noise amplifier and a limiter amplifier, etc. The PLL reference oscillator (X1) is used for the 2nd LO signal via the PLL IC (IC1, pins 11, 9), and is applied to pin 1 of the FM IF IC (IC2).

The mixed 2nd IF signal is output from pin 3 and passed through the ceramic bandpass filter (FI3) to remove unwanted heterodyne frequencies. It is then amplified at the limiter amplifier section (IC2, pin 5) and applied to the quadrature detector section (IC2, pins 10, 11) to demodulate the 2nd IF signal into AF signals.

4-1-5 AF CIRCUIT (RF AND MAIN UNITS)

AF signals from the FM IF IC (RF unit; IC2, pin 9) are passed through the high-pass filter (RF unit; Q15, Q16) to remove CTCSS signals then applied to the MAIN unit via J2 pin 10 as the “VOL” signal.

The “VOL” signal (AF signals) from the RF unit is applied to the [VOL] control (MAIN unit; R58) to control the audio level via the volume mute switch (Q23). The level controlled AF signals are applied to the AF power amplifier (IC9, pin 2) to drive an internal speaker (SP1) via the [SP] jack (J1).

• 2nd IF AND DEMODULATOR CIRCUITS

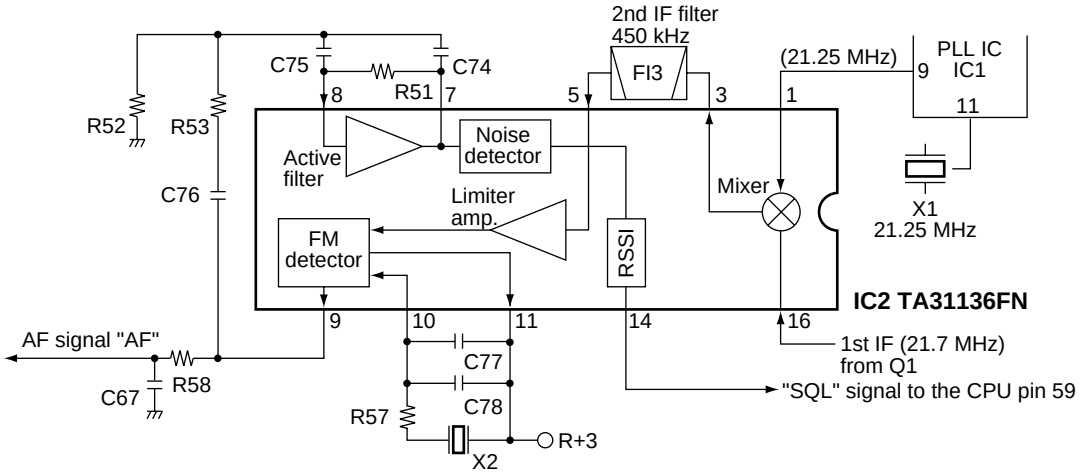

4-1-6 SQUELCH CIRCUIT (RF AND MAIN UNITS)

(1) NOISE SQUELCH

The noise squelch circuit cuts out AF signals when no RF signals are received. By detecting noise components in the AF signals, the squelch circuit switches the AF mute switch.

A portion of the AF signals from the FM IF IC (RF unit; IC2, pin 9) are applied to the active filter section (RF unit; IC2, pin 8). The active filter section amplifies and filters noise components. The filtered signals are applied to the noise detector section and output from pin 14 as the “SQL” signal.

The “SQL” signal from IC2 (pin 14) passes through J2 pin 9, and is then applied to the CPU (MAIN unit; IC1, pin 59). The CPU analyzes the noise condition and outputs the “RMUT” and “AFON” signals to toggle the volume mute (MAIN unit; Q23) and AF mute (MAIN unit; Q5, Q10, Q11) switches.

(2) TONE SQUELCH

The tone squelch circuit detects AF signals and opens the squelch only when receiving a signal containing a matching subaudible tone (CTCSS). When tone squelch is in use, and a signal with a mismatched or no subaudible tone is received, the tone squelch circuit mutes the AF signals even when noise squelch is open.

A portion of the AF signals from the FM IF IC (RF unit; IC2, pin 9) passes through the tone low-pass filter (MAIN unit; Q7, Q12) to remove AF (voice) signals and is applied to the CTCSS decoder inside the CPU (MAIN unit; IC1, pin 58) via the “CTCIN” line to control the volume mute and AF mute switches.

4-2 TRANSMITTER CIRCUITS

4-2-1 MICROPHONE AMPLIFIER CIRCUIT (MAIN UNIT)

AF signals from the internal/external microphone are applied to the microphone amplifier circuit (IC2b) via the microphone switch (Q6). The amplified signals are passed through the low-pass filter (IC2a) and applied to the modulation circuit in the RF unit via J4 pin 5 as the MOD signal.

4-2-2 MODULATION CIRCUIT (RF UNIT)

The filtered audio signals from J4, pin 5 (On the MAIN unit) are passed through the deviation adjustment pot (R50) then applied to the modulation circuit (D4, D5) to modulate transmit signals at the VCO circuit (Q6).

The modulated signal is applied to the drive amplifier circuit.

4-2-3 DRIVE/POWER AMPLIFIER CIRCUITS (RF UNIT)

The amplifier circuit amplifies the VCO oscillating signal to the output power level.

The amplified transmit signal is passed through the antenna switching circuit (D6) and low-pass filter, and is then applied to the antenna.

The modulated transmit signal is amplified at the pre-drive and drive amplifiers (Q8, Q201) after being amplified at the buffer amplifier (Q7). The amplified signal is power amplified at the power amplifier (Q202) to obtain 500 mW or (IC–4008A) 10 mW (IC–4008MK2) of RF power.

The power amplified signal is then applied to the antenna via the low-pass filter circuits.

4-3 PLL CIRCUITS (RF UNIT)

A PLL circuit provides stable oscillation of the transmit frequency and receive 1st LO frequency. The PLL output compares the phase of the divided VCO frequency to the reference frequency. The PLL output frequency is controlled by the divided ratio (N-data) of a programmable divider.

The PLL circuit consists of the VCO circuit (Q6, D4, D5). An oscillated signal from the VCO passes through the buffer amplifier (Q7) is applied to the PLL IC (IC1, pin16) and is prescaled in the PLL IC based on the divided ratio (N-data). The reference signal is generated at the reference oscillator (X1) and is also applied to the PLL IC. The PLL IC detects the out-of-step phase using the reference frequency and outputs it from pin 14. The output signal is passed through the loop filter (R45, C68) and is then applied to the VCO circuit as the lock voltage.

If the oscillated signal drifts, its phase changes from that of the reference frequency, causing a lock voltage change to compensate for the drift in the oscillated frequency.

• PLL circuit

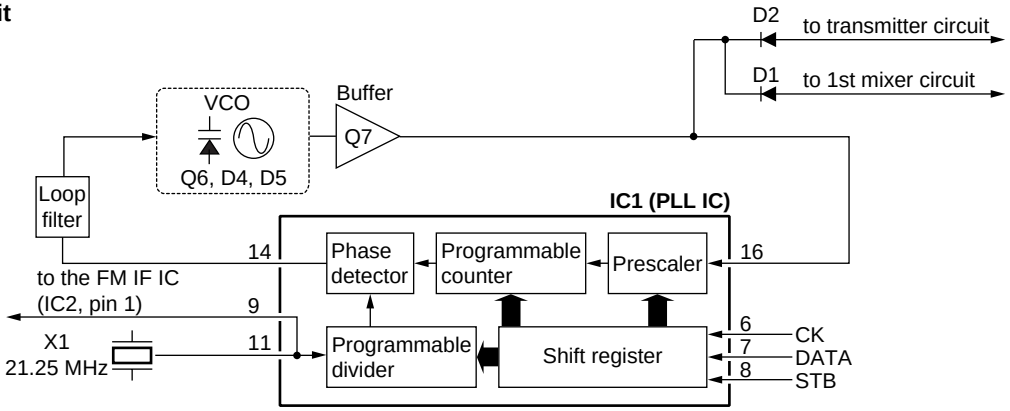

4-4 POWER SUPPLY CIRCUITS

VOLTAGE LINE

LINE	DESCRIPTION
BATT	The voltage from the connected battery pack.
3V	Common 3 V converted from the BATT line at the 3V regulator circuit (IC6). The circuit outputs the voltage regardless of the power ON/OFF condition.
+3V	Common 3 V converted from the BATT line at the +3V regulator circuit (Q25, D4).
R+3	Receive 3 V cotrolled by the R+3 regulator circuit (Q18) using the “RXV” signal from CPU (IC1).
T+3	Transmit 3 V converted from the BATT line at the T+3 regulator circuit (Q27, Q28, D5, etc.) using the “TXV” signal coming from CPU (IC1).

4-5 PORT ALLOCATIONS

4-5-1 CPU (MAIN unit; IC1)

Pin number	Port name	Description
31	PTT2	Input port for the PTT switch from the external mic jack (MAIN unit; J1). Low : External PTT switch is ON.
34	PTT1	Input port for the internal PTT switch. Low : While PTT switch is pushed.
35	DOWN	Input port for the [DOWN] switch.
36	UP	Input port for the [UP] switch.
37	MODE	Input port for the [MODE] switch.
38	POWSW	Input port for the POWER switch. Low : While POWER switch is pushed.
45	UNLK	Input port for PLL unlock signal from the PLL IC (RF unit; IC1). Low : During unlock.
46	BEEP	Outputs beep audio signal.
48	RMUTE	Outputs volume mute switch (Q23) control signal. High : While squelched
49	AFON	Outputs control signal for the AF amplifier regulator circuit (Q5, Q10, Q11). High: When squelch is open.
50	PLLCK	Outputs clock signal to the PLL IC (RF unit; IC1).
51	PLLDA	Outputs data signals to the PLL IC (RF unit; IC1).
52	PLLST	Outputs strobe signals for the PLL IC (RF unit; IC1).
53	POWER	Outputs control signal for the +3V regulator circuit (MAIN unit; Q25, D4).
54–56	CTCO0–CTCO2	Output port for the CTCSS signals.
57	TXMOD	Outputs control signal for the MIC amplifier (IC2). Low : While microphone amplifier is ON.
58	CTCIN	Input port for the CTCSS decode signals.
59	SQLIN	Input port for squelch level signal.
60	REMIN	Input ports for the control signal from the external remote microphone.
61	BATIN	Input port form the connected battery pack for low battery indication.
62	SENIN	Input port for the RSSI signal from the FM IF IC (RF unit; IC2) to detect receiving signal strength level.
73	EEPCK	Outputs clock signal to the EEPROM (IC3).
74	EEPDA	Outputs data signals to the EEPROM (IC3).
75	PSC	Output port for power save function, applied to VCO regurator circuit (RF unit; Q13, Q14, D8, D9).
76	RXV	Outputs the R+3 regulator control signal (Q18).
77	TXV	Outputs the T+3 regulator control signal (Q27, Q28, D5, etc.).
78	LAMPC	Outputs control signal for LCD backlight. Low : While LCD backlight is ON.
79	MICSW	Outputs internal microphone control signal. High : While internal PTT switch is pushed.
80	MMUTE	Outputs MIC mute signal for RING function. High : While RING signals are output, etc.

SECTION 5 ADJUSTMENT PROCEDURES

5-1 PREPARATION

■ REQUIRED TEST EQUIPMENT

EQUIPMENT	GRADE AND RANGE	EQUIPMENT	GRADE AND RANGE
DC power supply	Output voltage : 4.5 V DC Current capacity : 1 A or more	Audio generator	Frequency range : 300–3000 Hz Measuring range : 1–500 mV
RF power meter (terminated type)	Measuring range : 1 mW–1 W Frequency range : 300–600 MHz Impedance : 50 Ω SWR : Less than 1.2 : 1	Standard signal generator (SSG)	Frequency range : 0.1–600 MHz Output level : 0.1 μV–32 mV (–127 to –17 dBm)
Frequency counter	Frequency range : 0.1–600 MHz Frequency accuracy : ±1 ppm or better Sensitivity : 100 mV or better	Oscilloscope	Frequency range : DC–20 MHz Measuring range : 0.01–10 V
		AC millivoltmeter	Measuring range : 10 mV–10 V
FM deviation meter	Frequency range : 30–600 MHz Measuring range : 0 to ±10 kHz	External speaker	Input impedance : 8 Ω Capacity : 300 mW or more
DC voltmeter	Input impedance : 50 kΩ/V DC or better	Attenuator	Power attenuation : 30 or 40 dB Capacity : 1 W or more

■ ENTERING THE ADJUSTMENT MODE

① Turn the transceiver power OFF.

② While connecting the “TEST” on the RF board to “GND”, then turn power ON.
(See location at page 5-3)

■ CONNECTIONS

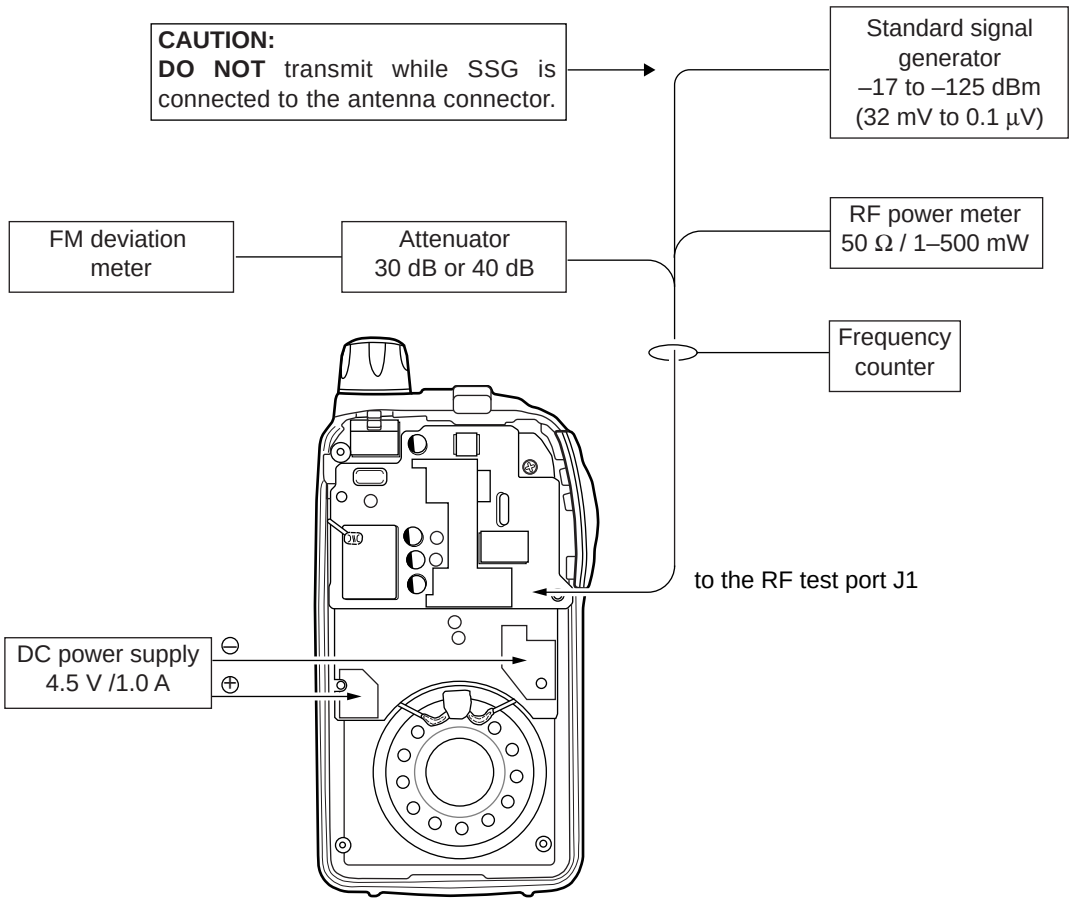

5-2 ADJUSTMENT

ADJUSTMENT		ADJUSTMENT CONDITION	MEASUREMENT		VALUE	ADJUSTMENT POINT	
			UNIT	LOCATION		UNIT	ADJUST
REFERENCE FREQUENCY	1	• Operating channel : Ch 35 • Transmitting	Top panel	Loosely couple a frequency counter to the antenna.	433.925000 MHz	RF	C63
OUTPUT POWER	1	• Operating channel : Ch 35 • Transmitting	RF	Connect an RF power meter to the RF test port J1.	9 mW [ITA/–1] 470 mW [CSA/–1]	RF	R206
FM DEVIATION	1	• Operating channel : Ch 01 • Connect an audio generator to the [MIC] jack and set as: 1 kHz/100 mV rms • Set an FM deviation meter as: HPF : OFF LPF : 20 kHz or 15 kHz De-emphasis : OFF Detector : (P–P)/2 • Set group No. : 01 • Transmitting	RF	Connect an FM deviation meter to the RF test port J1.	±4.8 kHz	RF	R50
	2	• Set group No. : OFF (– –) • Set an audio generator output level until the deviation is ±3.5 kHz. • Transmitting			10 mV ±3 dB		Verify
SQUELCH	1	• Operating channel : Ch 35 • Connect an SSG to J1 on the RF unit and set as: Level : 0.14 µV* (–124 dBm) Modulation : OFF • Receiving	Front panel	Internal speaker		Front panel	Push and hold [MODE] and [DOWN]
	2	• Set an SSG as : Level : OFF • Receiving			Audio signal disappears.		Verify

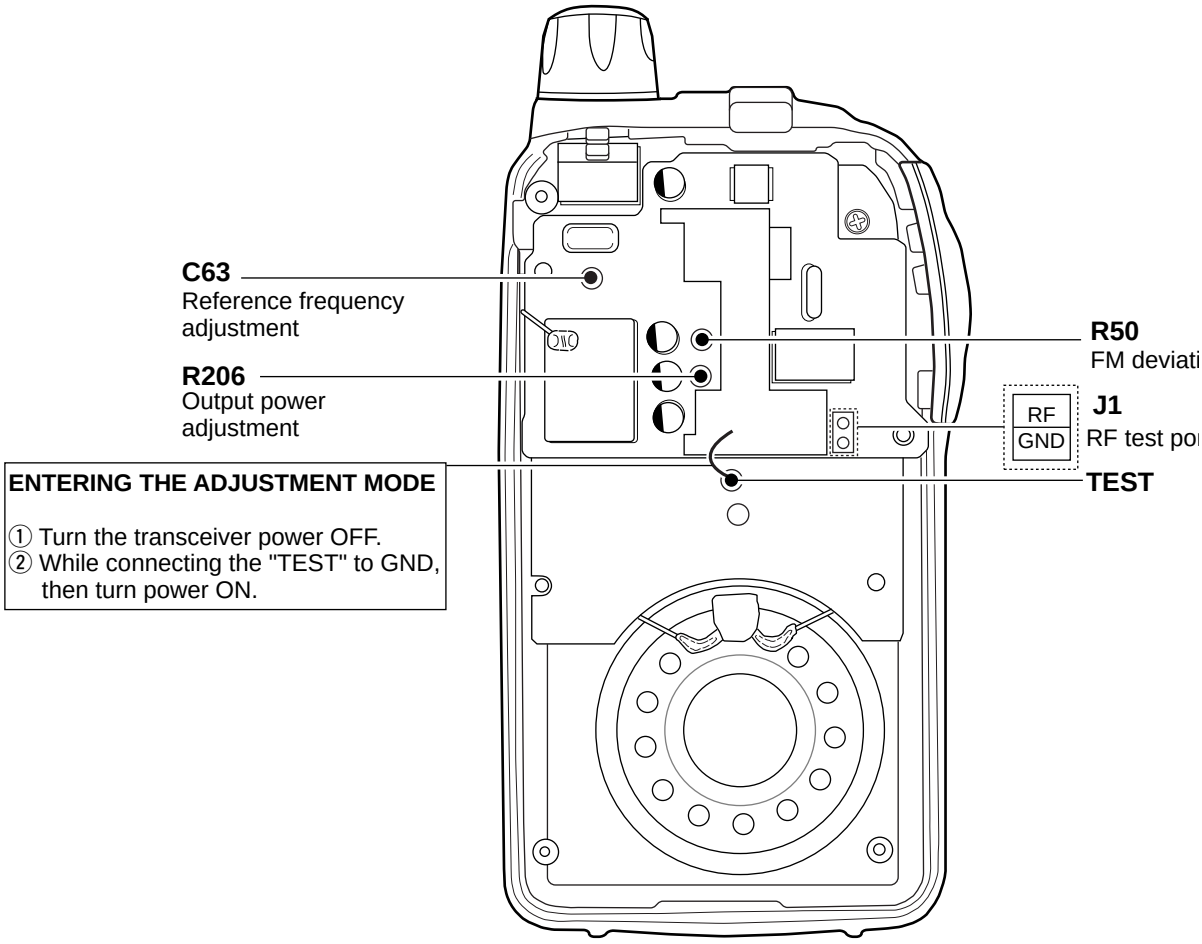
C63
Reference frequency adjustment
R206
Output power adjustment
R50
FM deviati
RF
GND
J1
RF test po
TEST
ENTERING THE ADJUSTMENT MODE
① Turn the transceiver power OFF.
② While connecting the "TEST" to GND, then turn power ON.

SECTION 6 PARTS LIST

[MAIN UNIT]

REF NO.	ORDER NO.	DESCRIPTION	
IC1	1140006881	S.IC	µPD753036GK-524-BE9
IC2	1110002820	S.IC	NJM2100M-T1
IC3	1140004450	S.IC	X24C01AS-3.0T6
IC5	1110004710	S.IC	S-80928ANMP-DDR-T2
IC6	1180001150	S.IC	S-81230SG-QB-T1
IC9	1110002810	S.IC	NJM2070M-T1
Q1	1590000720	S.TRANSISTOR	DTA144EUA T106
Q2	1590001860	S.TRANSISTOR	UN9215 (TX)
Q3	1590000800	S.TRANSISTOR	UN5119 (TX)
Q5	1510000580	S.TRANSISTOR	2SA1362-GR (TE85R)
Q6	1560000840	S.FET	2SK1829 (TE85R)
Q7	1530002280	S.TRANSISTOR	2SC4081 T107 S
Q10	1530002280	S.TRANSISTOR	2SC4081 T107 S
Q11	1530003090	S.TRANSISTOR	2SC4213-B (TE85R)
Q12	1530002280	S.TRANSISTOR	2SC4081 T107 S
Q14	1590001330	S.TRANSISTOR	DTA114EUA T106
Q18	1510000770	S.TRANSISTOR	2SA1586-GR (TE85R)
Q23	1590001390	S.FET	2SJ144-Y (TE85R)
Q25	1590002490	S.TRANSISTOR	UMZ2N TR
Q27	1530002280	S.TRANSISTOR	2SC4081 T107 S
Q28	1520000200	S.TRANSISTOR	2SB798-T2 DK
Q29	1590000680	S.TRANSISTOR	DTC114EUA T106
Q101	1590002630	S.TRANSISTOR	UMZ1N TR [CSA], [CSA-1] only
D2	1750000550	S.DIODE	1SS355 TE-17
D4	1750000550	S.DIODE	1SS355 TE-17
D5	1750000550	S.DIODE	1SS355 TE-17 [CSA], [CSA-1]
	1790001250	S.DIODE	MA2S111-(TX) [ITA], [ITA-1]
D101	1750000550	S.DIODE	1SS355 TE-17 [CSA], [CSA-1]
	1790001250	S.DIODE	MA2S111-(TX) [ITA], [ITA-1]
D303	1790001250	S.DIODE	MA2S111-(TX) [ITA], [ITA-1] only
X1	6050010450	S.XTAL	CR-627 (5.8368 MHz)
R2	7030003670	S.RESISTOR	ERJ3GEYJ 823 V (82 kΩ)
R4	7030003670	S.RESISTOR	ERJ3GEYJ 823 V (82 kΩ)
R5	7030003810	S.RESISTOR	ERJ3GEYJ 125 V (1.2 MΩ)
R6	7030003710	S.RESISTOR	ERJ3GEYJ 184 V (180 kΩ)
R7	7030003450	S.RESISTOR	ERJ3GEYJ 122 V (1.2 kΩ)
R9	7030003680	S.RESISTOR	ERJ3GEYJ 104 V (100 kΩ)
R10	7030003310	S.RESISTOR	ERJ3GEYJ 820 V (82 Ω)
R12	7030003200	S.RESISTOR	ERJ3GEYJ 100 V (10 Ω)
R13	7030003520	S.RESISTOR	ERJ3GEYJ 472 V (4.7 kΩ)
R14	7030003500	S.RESISTOR	ERJ3GEYJ 332 V (3.3 kΩ)
R22	7030003620	S.RESISTOR	ERJ3GEYJ 333 V (33 kΩ)
R23	7030003580	S.RESISTOR	ERJ3GEYJ 153 V (15 kΩ)
R24	7030003820	S.RESISTOR	ERJ3GEYJ 155 V (1.5 MΩ)
R25	7030003570	S.RESISTOR	ERJ3GEYJ 123 V (12 kΩ)
R26	7030003560	S.RESISTOR	ERJ3GEYJ 103 V (10 kΩ)
R27	7030003320	S.RESISTOR	ERJ3GEYJ 101 V (100 Ω)
R30	7030003660	S.RESISTOR	ERJ3GEYJ 683 V (68 kΩ)
R31	7030003800	S.RESISTOR	ERJ3GEYJ 105 V (1 MΩ)
R32	7030003780	S.RESISTOR	ERJ3GEYJ 684 V (680 kΩ)
R33	7030003540	S.RESISTOR	ERJ3GEYJ 682 V (6.8 kΩ)
R34	7030003540	S.RESISTOR	ERJ3GEYJ 682 V (6.8 kΩ)
R35	7030003530	S.RESISTOR	ERJ3GEYJ 562 V (5.6 kΩ)
R36	7030003560	S.RESISTOR	ERJ3GEYJ 103 V (10 kΩ)
R37	7030003600	S.RESISTOR	ERJ3GEYJ 223 V (22 kΩ)
R38	7030003600	S.RESISTOR	ERJ3GEYJ 223 V (22 kΩ)
R39	7030003670	S.RESISTOR	ERJ3GEYJ 823 V (82 kΩ)
R40	7030003640	S.RESISTOR	ERJ3GEYJ 473 V (47 kΩ)
R41	7030003520	S.RESISTOR	ERJ3GEYJ 472 V (4.7 kΩ)
R42	7030003510	S.RESISTOR	ERJ3GEYJ 392 V (3.9 kΩ)
R43	7030003650	S.RESISTOR	ERJ3GEYJ 563 V (56 kΩ)
R45	7030003840	S.RESISTOR	ERJ3GEYJ 225 V (2.2 MΩ)
R46	7030003320	S.RESISTOR	ERJ3GEYJ 101 V (100 Ω)
R49	7030003320	S.RESISTOR	ERJ3GEYJ 101 V (100 Ω)
R50	7030003520	S.RESISTOR	ERJ3GEYJ 472 V (4.7 kΩ)
R51	7030003760	S.RESISTOR	ERJ3GEYJ 474 V (470 kΩ)

[MAIN UNIT]

REF NO.	ORDER NO.	DESCRIPTION	
R52	7030003740	S.RESISTOR	ERJ3GEYJ 334 V (330 kΩ)
R53	7030003820	S.RESISTOR	ERJ3GEYJ 155 V (1.5 MΩ)
R54	7030003450	S.RESISTOR	ERJ3GEYJ 122 V (1.2 kΩ)
R55	7030003330	S.RESISTOR	ERJ3GEYJ 121 V (120 Ω)
R56	7030004050	S.RESISTOR	ERJ3GEYJ 1R0 V (1 Ω)
R57	7030003580	S.RESISTOR	ERJ3GEYJ 153 V (15 kΩ)
R58	7210001970	VARIABLE	RV-244 (RK0971110) 10KA
R60	7030003680	S.RESISTOR	ERJ3GEYJ 104 V (100 kΩ)
R61	7030003280	S.RESISTOR	ERJ3GEYJ 470 V (47 Ω)
R62	7030003680	S.RESISTOR	ERJ3GEYJ 104 V (100 kΩ)
R63	7030003530	S.RESISTOR	ERJ3GEYJ 562 V (5.6 kΩ)
R64	7030003590	S.RESISTOR	ERJ3GEYJ 183 V (18 kΩ)
R65	7030003590	S.RESISTOR	ERJ3GEYJ 183 V (18 kΩ)
R66	7030003590	S.RESISTOR	ERJ3GEYJ 183 V (18 kΩ)
R67	7030003590	S.RESISTOR	ERJ3GEYJ 183 V (18 kΩ)
R68	7030003590	S.RESISTOR	ERJ3GEYJ 183 V (18 kΩ)
R69	7030003590	S.RESISTOR	ERJ3GEYJ 183 V (18 kΩ)
R70	7030003660	S.RESISTOR	ERJ3GEYJ 683 V (68 kΩ)
R71	7030003620	S.RESISTOR	ERJ3GEYJ 333 V (33 kΩ)
R72	7030003800	S.RESISTOR	ERJ3GEYJ 105 V (1 MΩ)
R74	7030003560	S.RESISTOR	ERJ3GEYJ 103 V (10 kΩ)
R76	7030003680	S.RESISTOR	ERJ3GEYJ 104 V (100 kΩ)
R77	7030003400	S.RESISTOR	ERJ3GEYJ 471 V (470 Ω)
R78	7030003560	S.RESISTOR	ERJ3GEYJ 103 V (10 kΩ)
R79	7030003720	S.RESISTOR	ERJ3GEYJ 224 V (220 kΩ)
R80	7030003680	S.RESISTOR	ERJ3GEYJ 104 V (100 kΩ)
R81	7030003560	S.RESISTOR	ERJ3GEYJ 103 V (10 kΩ)
R86	7030003680	S.RESISTOR	ERJ3GEYJ 104 V (100 kΩ)
R87	7030003800	S.RESISTOR	ERJ3GEYJ 105 V (1 MΩ)
R88	7030003680	S.RESISTOR	ERJ3GEYJ 104 V (100 kΩ)
R89	7030003440	S.RESISTOR	ERJ3GEYJ 102 V (1 kΩ)
R90	7030003440	S.RESISTOR	ERJ3GEYJ 102 V (1 kΩ)
R94	7030003720	S.RESISTOR	ERJ3GEYJ 224 V (220 kΩ)
R95	7030003520	S.RESISTOR	ERJ3GEYJ 472 V (4.7 kΩ)
R96	7030003680	S.RESISTOR	ERJ3GEYJ 104 V (100 kΩ)
R97	7030003680	S.RESISTOR	ERJ3GEYJ 104 V (100 kΩ)
R98	7030003680	S.RESISTOR	ERJ3GEYJ 104 V (100 kΩ)
R99	7030003680	S.RESISTOR	ERJ3GEYJ 104 V (100 kΩ)
R100	7030003680	S.RESISTOR	ERJ3GEYJ 104 V (100 kΩ)
R101	7030003680	S.RESISTOR	ERJ3GEYJ 104 V (100 kΩ)
R102	7030003680	S.RESISTOR	ERJ3GEYJ 104 V (100 kΩ)
R103	7030003680	S.RESISTOR	ERJ3GEYJ 104 V (100 kΩ)
R105	7030003560	S.RESISTOR	ERJ3GEYJ 103 V (10 kΩ)
R106	7030003560	S.RESISTOR	ERJ3GEYJ 103 V (10 kΩ)
R108	7030003620	S.RESISTOR	ERJ3GEYJ 333 V (33 kΩ)
R110	7030003800	S.RESISTOR	ERJ3GEYJ 105 V (1 MΩ)
R112	7030003560	S.RESISTOR	ERJ3GEYJ 103 V (10 kΩ) [CSA], [CSA-1]
	7030003620	S.RESISTOR	ERJ3GEYJ 333 V (33 kΩ) [ITA], [ITA-1]
R114	7030003450	S.RESISTOR	ERJ3GEYJ 122 V (1.2 kΩ) [ITA], [ITA-1]
	7030003500	S.RESISTOR	ERJ3GEYJ 332 V (3.3 kΩ) [CSA], [CSA-1]
R115	7030003410	S.RESISTOR	ERJ3GEYJ 561 V (560 Ω) [CSA], [CSA-1]
R118	7030003520	S.RESISTOR	ERJ3GEYJ 472 V (4.7 kΩ)
R119	7030003680	S.RESISTOR	ERJ3GEYJ 104 V (100 kΩ) [CSA], [CSA-1] only
R200	7030003840	S.RESISTOR	ERJ3GEYJ 225 V (2.2 MΩ) [CSA], [CSA-1] only
R201	7030003370	S.RESISTOR	ERJ3GEYJ 271 V (270 Ω) [CSA], [CSA-1] only
R202	7030003320	S.RESISTOR	ERJ3GEYJ 101 V (100 Ω)
R301	7030003590	S.RESISTOR	ERJ3GEYJ 183 V (18 kΩ) [ITA], [ITA-1] only
R302	7030003440	S.RESISTOR	ERJ3GEYJ 102 V (1 kΩ) [ITA], [ITA-1] only
C1	4030009980	S.CERAMIC	C1608 JB 1H 152K-T-A
C3	4030011600	S.CERAMIC	C1608 JB 1C 104KT-N
C4	4030011600	S.CERAMIC	C1608 JB 1C 104KT-N
C5	4030006850	S.CERAMIC	C1608 JB 1H 471K-T-A
C6	4030008680	S.CERAMIC	C2012 JF 1C 105Z-T-A
C7	4030011600	S.CERAMIC	C1608 JB 1C 104KT-N

S.=Surface mount

[MAIN UNIT]

REF NO.	ORDER NO.	DESCRIPTION	
C8	4510004630	S.ELECTROLYTIC	ECEV1CA100SR
C9	4030006850	S.CERAMIC	C1608 JB 1H 471K-T-A
C10	4030006850	S.CERAMIC	C1608 JB 1H 471K-T-A
C11	4030006850	S.CERAMIC	C1608 JB 1H 471K-T-A
C15	4030011600	S.CERAMIC	C1608 JB 1C 104KT-N
C17	4550006880	S.TANTALUM	TEMSVD2 0J 157M-12R
C18	4510004630	S.ELECTROLYTIC	ECEV1CA100SR
C20	4030011600	S.CERAMIC	C1608 JB 1C 104KT-N
C21	4030011600	S.CERAMIC	C1608 JB 1C 104KT-N
C24	4030008900	S.CERAMIC	C1608 JB 1C 333K-T-A
C25	4030006850	S.CERAMIC	C1608 JB 1H 471K-T-A
C26	4030006850	S.CERAMIC	C1608 JB 1H 471K-T-A
C27	4030011600	S.CERAMIC	C1608 JB 1C 104KT-N
C28	4030008920	S.CERAMIC	C1608 JB 1C 473K-T-A
C29	4030011280	S.CERAMIC	C1608 CH 1H 271J-T-A
C31	4030008880	S.CERAMIC	C1608 JB 1C 223K-T-A
C32	4030011600	S.CERAMIC	C1608 JB 1C 104KT-N
C34	4030006880	S.CERAMIC	C1608 JB 1H 472K-T-A
C35	4030011600	S.CERAMIC	C1608 JB 1C 104KT-N
C36	4030006860	S.CERAMIC	C1608 JB 1H 102K-T-A
C40	4030011600	S.CERAMIC	C1608 JB 1C 104KT-N
C42	4030006900	S.CERAMIC	C1608 JB 1E 103K-T-A
C44	4030011600	S.CERAMIC	C1608 JB 1C 104KT-N
C45	4030009650	S.CERAMIC	C1608 CH 1H 240J-T-A
C46	4030009650	S.CERAMIC	C1608 CH 1H 240J-T-A
C47	4030006850	S.CERAMIC	C1608 JB 1H 471K-T-A
C48	4510005430	S.ELECTROLYTIC	ECEV0JA220SR
C49	4030011600	S.CERAMIC	C1608 JB 1C 104KT-N
C50	4030011600	S.CERAMIC	C1608 JB 1C 104KT-N
C51	4030011600	S.CERAMIC	C1608 JB 1C 104KT-N
C52	4510005860	S.ELECTROLYTIC	ECEV1HA2R2SR
C53	4030011600	S.CERAMIC	C1608 JB 1C 104KT-N
C54	4030011600	S.CERAMIC	C1608 JB 1C 104KT-N
C55	4510005870	S.ELECTROLYTIC	ECEV1HA3R3SR
C56	4030011600	S.CERAMIC	C1608 JB 1C 104KT-N
C57	4030011600	S.CERAMIC	C1608 JB 1C 104KT-N
C59	4030006850	S.CERAMIC	C1608 JB 1H 471K-T-A
C60	4030011600	S.CERAMIC	C1608 JB 1C 104KT-N
C61	4030011600	S.CERAMIC	C1608 JB 1C 104KT-N
C62	4030011600	S.CERAMIC	C1608 JB 1C 104KT-N
C63	4030011600	S.CERAMIC	C1608 JB 1C 104KT-N
C64	4510005430	S.ELECTROLYTIC	ECEV0JA220SR
C65	4030011600	S.CERAMIC	C1608 JB 1C 104KT-N
C67	4030009590	S.CERAMIC	C2012 JF 1C 225Z-T-A
C71	4030011600	S.CERAMIC	C1608 JB 1C 104KT-N
C72	4030006900	S.CERAMIC	C1608 JB 1E 103K-T-A
C73	4030008650	S.CERAMIC	C1608 JB 1H 332K-T-A
C74	4030006860	S.CERAMIC	C1608 JB 1H 102K-T-A
C75	4030006860	S.CERAMIC	C1608 JB 1H 102K-T-A
C79	4030011600	S.CERAMIC	C1608 JB 1C 104KT-N
C80	4510005900	S.ELECTROLYTIC	ECEV0GA101SR
C81	4030008900	S.CERAMIC	C1608 JB 1C 333K-T-A
C82	4030008920	S.CERAMIC	C1608 JB 1C 473K-T-A
C83	4030011600	S.CERAMIC	C1608 JB 1C 104KT-N
C85	4030011600	S.CERAMIC	C1608 JB 1C 104KT-N
C86	4030009590	S.CERAMIC	C2012 JF 1C 225Z-T-A
C87	4030006850	S.CERAMIC	C1608 JB 1H 471K-T-A
C88	4030006850	S.CERAMIC	C1608 JB 1H 471K-T-A
C89	4030006850	S.CERAMIC	C1608 JB 1H 471K-T-A
C90	4030006850	S.CERAMIC	C1608 JB 1H 471K-T-A
C91	4030006850	S.CERAMIC	C1608 JB 1H 471K-T-A
C92	4030006850	S.CERAMIC	C1608 JB 1H 471K-T-A
C93	4030010760	S.CERAMIC	C1608 CH 1H 331J-T-A
C94	4030010760	S.CERAMIC	C1608 CH 1H 331J-T-A
C95	4030010760	S.CERAMIC	C1608 CH 1H 331J-T-A
C96	4030010760	S.CERAMIC	C1608 CH 1H 331J-T-A
C97	4030010760	S.CERAMIC	C1608 CH 1H 331J-T-A
C98	4030010760	S.CERAMIC	C1608 CH 1H 331J-T-A
J1	6450000130	CONNECTOR	HSJ1102-01-540
J3	6450001060	CONNECTOR	HSJ1493-01-010
J4	6510017950	S.CONNECTOR	4-175638-4
DS1	5010000120	S.LED	LN1371G-(TR)
DS2	5030001580	LCD	LD-BU10185J (E-10185-1)
MC1	7700002160	MICROPHON	KUC3523-040245
S1	2260001900	SWITCH	SW-149

[MAIN UNIT]

REF NO.	ORDER NO.	DESCRIPTION		
W1	7030003860	S.JUMPER	ERJ3GE JPW V	
W3	7030003860	S.JUMPER	ERJ3GE JPW V	
W4	7030003860	S.JUMPER	ERJ3GE JPW V	
W5	9001502002	WIRE	72/98/030/X98/X98	
W6	7120000470	JUMPER	ERDS2T0	
W7	7030003860	S.JUMPER	ERJ3GE JPW V	
EP1	8930045510	LCD CONTACT	SRCN-2045-SP-N-W	
EP2	0910050341	PCB	B 5161A	[ITA], [ITA-1]
	0910050792	PCB	B 5109B	[CSA], [CSA-1]

[RF BOARD]

REF NO.	ORDER NO.	DESCRIPTION	
IC1	1110004150	S.IC	TB31202FN (ER)
IC2	1110003200	S.IC	TA31136FN (EL)
Q1	1530002600	S.TRANSISTOR	2SC4215-O (TE85R)
Q2	1530002920	S.TRANSISTOR	2SC4226-T2 R25
Q3	1530003620	S.TRANSISTOR	2SC5194-T1
Q6	1530003320	S.TRANSISTOR	2SC5108-Y (TE85R)
Q7	1530003320	S.TRANSISTOR	2SC5108-Y (TE85R)
Q8	1530002940	S.TRANSISTOR	2SC4228-T2 R44
Q12	1530003260	S.TRANSISTOR	2SC5006-T1
Q13	1530002280	S.TRANSISTOR	2SC4081 T107 S
Q14	1510000770	S.TRANSISTOR	2SA1586-GR (TE85R)
Q15	1530002280	S.TRANSISTOR	2SC4081 T107 S
Q16	1530002280	S.TRANSISTOR	2SC4081 T107 S
Q201	1530000372	S.TRANSISTOR	2SC3356 R24-T2B
Q202	1590002600	S.FET	MRF9745 T1
D1	1790000620	S.DIODE	MA77 (TX)
D2	1790000620	S.DIODE	MA77 (TX)
D4	1720000640	S.VARICAP	1SV284 (TPH3)
D5	1720000640	S.VARICAP	1SV284 (TPH3)
D7	1790001260	S.DIODE	MA2S077-(TX)
D8	1750000550	S.DIODE	1SS355 TE-17
D9	1750000550	S.DIODE	1SS355 TE-17
D101	1790001260	S.DIODE	MA2S077-(TX)
D102	1790001260	S.DIODE	MA2S077-(TX)
D103	1790001240	S.DIODE	MA2S728-(TX)
FI1	2040001330	S.SAW	NSVA468 (433.92MHZ)
FI2	2010002330	MONOLITH	FL-298 (21.700 MHz)
FI3	2020001270	CERAMIC	CFWM450E
X1	6050010480	S.XTAL	CR-633 (21.250 MHz)
X2	6070000210	S.DISCRIMINATOR	CDBCA450CX24
L1	6200002240	S.COIL	ELJFC 2R2K-F
L3	6200004380	S.COIL	LL1608-F18NK
L4	6200005670	S.COIL	ELJRE 12NG-F
L5	6200008270	S.COIL	0.26-1.0-5TL 17N
L6	6200008270	S.COIL	0.26-1.0-5TL 17N
L10	6200005700	S.COIL	ELJRE 22NG-F
L11	6200003640	S.COIL	MLF1608K 100K-T
L12	6200003640	S.COIL	MLF1608K 100K-T
L13	6200002350	S.COIL	LQN 1A 27NJ04
L14	6200005720	S.COIL	ELJRE 33NG-F
L15	6200007000	S.COIL	ELJRE 82NG-F
L19	6200005710	S.COIL	ELJRE 27NG-F
L21	6200005700	S.COIL	ELJRE 22NG-F
L23	6200008430	S.COIL	0.20-1.0-4TL 15N
L25	6200002190	S.COIL	MLF2012A 4R7K-T
L105	6200007000	S.COIL	ELJRE 82NG-F
L201	6200005700	S.COIL	ELJRE 22NG-F
L202	6200005720	S.COIL	ELJRE 33NG-F
L203	6200008440	S.COIL	LQN21A 8N2D04
L204	6200008440	S.COIL	LQN21A 8N2D04
L205	6200006670	S.COIL	ELJRE 68NG-F

S.=Surface mount

[RF UNIT]

REF NO.	ORDER NO.	DESCRIPTION	
L206	6200005690	S.COIL	ELJRE 18NG-F
L207	6200005690	S.COIL	ELJRE 18NG-F
L208	6200003640	S.COIL	MLF1608K 100K-T
R1	7030003430	S.RESISTOR	ERJ3GEYJ 821 V (820 Ω)
R2	7030003670	S.RESISTOR	ERJ3GEYJ 823 V (82 kΩ)
R3	7030003470	S.RESISTOR	ERJ3GEYJ 182 V (1.8 kΩ)
R4	7030003450	S.RESISTOR	ERJ3GEYJ 122 V (1.2 kΩ)
R5	7030003680	S.RESISTOR	ERJ3GEYJ 104 V (100 kΩ)
R6	7030003520	S.RESISTOR	ERJ3GEYJ 472 V (4.7 kΩ)
R7	7030003280	S.RESISTOR	ERJ3GEYJ 470 V (47 Ω)
R10	7030003550	S.RESISTOR	ERJ3GEYJ 822 V (8.2 kΩ)
R12	7030003440	S.RESISTOR	ERJ3GEYJ 102 V (1 kΩ)
R16	7030003260	S.RESISTOR	ERJ3GEYJ 330 V (33 Ω)
R19	7030003400	S.RESISTOR	ERJ3GEYJ 471 V (470 Ω)
R25	7030003620	S.RESISTOR	ERJ3GEYJ 333 V (33 kΩ)
R27	7030003640	S.RESISTOR	ERJ3GEYJ 473 V (47 kΩ)
R29	7030003350	S.RESISTOR	ERJ3GEYJ 181 V (180 Ω)
R30	7030003620	S.RESISTOR	ERJ3GEYJ 333 V (33 kΩ)
R31	7030003620	S.RESISTOR	ERJ3GEYJ 333 V (33 kΩ)
R32	7030003540	S.RESISTOR	ERJ3GEYJ 682 V (6.8 kΩ)
R33	7030003550	S.RESISTOR	ERJ3GEYJ 822 V (8.2 kΩ)
R34	7030003420	S.RESISTOR	ERJ3GEYJ 681 V (680 Ω)
R35	7030003640	S.RESISTOR	ERJ3GEYJ 473 V (47 kΩ)
R36	7030003360	S.RESISTOR	ERJ3GEYJ 221 V (220 Ω)
R37	7030003600	S.RESISTOR	ERJ3GEYJ 223 V (22 kΩ)
R45	7030003520	S.RESISTOR	ERJ3GEYJ 472 V (4.7 kΩ)
R50	7310003630	S.TRIMMER	EVM-1XSX50 BQ4 (473)
R51	7030003770	S.RESISTOR	ERJ3GEYJ 564 V (560 kΩ)
R52	7030003410	S.RESISTOR	ERJ3GEYJ 561 V (560 Ω)
R53	7030003680	S.RESISTOR	ERJ3GEYJ 104 V (100 kΩ)
R54	7510000930	S.THERMISTOR	NTCCF2012 3NH 103KC-T
R55	7030003580	S.RESISTOR	ERJ3GEYJ 153 V (15 kΩ)
R56	7030003580	S.RESISTOR	ERJ3GEYJ 153 V (15 kΩ)
R57	7030003450	S.RESISTOR	ERJ3GEYJ 122 V (1.2 kΩ)
R58	7030003520	S.RESISTOR	ERJ3GEYJ 472 V (4.7 kΩ)
R59	7030003470	S.RESISTOR	ERJ3GEYJ 182 V (1.8 kΩ)
R60	7030003680	S.RESISTOR	ERJ3GEYJ 104 V (100 kΩ)
R61	7030003560	S.RESISTOR	ERJ3GEYJ 103 V (10 kΩ)
R62	7030003230	S.RESISTOR	ERJ3GEYJ 180 V (18 Ω)
R64	7030003650	S.RESISTOR	ERJ3GEYJ 563 V (56 kΩ)
R65	7030003500	S.RESISTOR	ERJ3GEYJ 332 V (3.3 kΩ)
R66	7030003570	S.RESISTOR	ERJ3GEYJ 123 V (12 kΩ)
R67	7030003780	S.RESISTOR	ERJ3GEYJ 684 V (680 kΩ)
R68	7030003750	S.RESISTOR	ERJ3GEYJ 394 V (390 kΩ)
R69	7030003510	S.RESISTOR	ERJ3GEYJ 392 V (3.9 kΩ)
R70	7030003610	S.RESISTOR	ERJ3GEYJ 273 V (27 kΩ)
R71	7030003560	S.RESISTOR	ERJ3GEYJ 103 V (10 kΩ)
R72	7030003550	S.RESISTOR	ERJ3GEYJ 822 V (8.2 kΩ)
R73	7030003780	S.RESISTOR	ERJ3GEYJ 684 V (680 kΩ)
R74	7030003750	S.RESISTOR	ERJ3GEYJ 394 V (390 kΩ)
R75	7030003560	S.RESISTOR	ERJ3GEYJ 103 V (10 kΩ)
R76	7030003510	S.RESISTOR	ERJ3GEYJ 392 V (3.9 kΩ)
R83	7030003560	S.RESISTOR	ERJ3GEYJ 103 V (10 kΩ)
R86	7030003300	S.RESISTOR	ERJ3GEYJ 680 V (68 Ω)
R88	7030003560	S.RESISTOR	ERJ3GEYJ 103 V (10 kΩ)
R93	7030003200	S.RESISTOR	ERJ3GEYJ 100 V (10 Ω)
R202	7030003540	S.RESISTOR	ERJ3GEYJ 682 V (6.8 kΩ)
R205	7030003440	S.RESISTOR	ERJ3GEYJ 102 V (1 kΩ) [ITA], [ITA-1]
	7510001180	S.THERMISTOR	NTCCM1608 3NH 221KC [CSA], [CSA-1]
R206	7310003610	S.TRIMMER	EVM-1XSX50 B14 (103)
R207	7030003440	S.RESISTOR	ERJ3GEYJ 102 V (1 kΩ)
R208	7030003440	S.RESISTOR	ERJ3GEYJ 102 V (1 kΩ)
R209	7030003360	S.RESISTOR	ERJ3GEYJ 221 V (220 Ω)
R210	7030003350	S.RESISTOR	ERJ3GEYJ 181 V (180 Ω)
R211	7030003250	S.RESISTOR	ERJ3GEYJ 270 V (27 Ω)
R212	7030003350	S.RESISTOR	ERJ3GEYJ 181 V (180 Ω)
R213	7030003360	S.RESISTOR	ERJ3GEYJ 221 V (220 Ω)
R301	7030003440	S.RESISTOR	ERJ3GEYJ 102 V (1 kΩ) [CSA], [CSA-1]
	7030003570	S.RESISTOR	ERJ3GEYJ 123 V (12 kΩ) [ITA], [ITA-1]
C1	4030006860	S.CERAMIC	C1608 JB 1H 102K-T-A
C2	4030008920	S.CERAMIC	C1608 JB 1C 473K-T-A
C3	4030008920	S.CERAMIC	C1608 JB 1C 473K-T-A
C4	4030006850	S.CERAMIC	C1608 JB 1H 471K-T-A
C5	4030006850	S.CERAMIC	C1608 JB 1H 471K-T-A

[RF UNIT]

REF NO.	ORDER NO.	DESCRIPTION	
C6	4030006850	S.CERAMIC	C1608 JB 1H 471K-T-A
C7	4030007050	S.CERAMIC	C1608 CH 1H 220J-T-A
C8	4030006970	S.CERAMIC	C1608 CH 1H 060D-T-A
C9	4030010780	S.CERAMIC	C1608 CH 1H 1R5C-T-A
C10	4030007010	S.CERAMIC	C1608 CH 1H 100D-T-A
C11	4030009470	S.CERAMIC	C1608 CH 1H R75C-T-A
C12	4030006990	S.CERAMIC	C1608 CH 1H 080D-T-A
C13	4030006860	S.CERAMIC	C1608 JB 1H 102K-T-A
C15	4030008920	S.CERAMIC	C1608 JB 1C 473K-T-A
C16	4030006850	S.CERAMIC	C1608 JB 1H 471K-T-A
C17	4030008880	S.CERAMIC	C1608 JB 1C 223K-T-A
C18	4030006860	S.CERAMIC	C1608 JB 1H 102K-T-A
C20	4030006850	S.CERAMIC	C1608 JB 1H 471K-T-A
C21	4030006850	S.CERAMIC	C1608 JB 1H 471K-T-A
C23	4030006940	S.CERAMIC	C1608 CH 1H 030C-T-A
C26	4030006850	S.CERAMIC	C1608 JB 1H 471K-T-A
C28	4030006850	S.CERAMIC	C1608 JB 1H 471K-T-A
C30	4030006980	S.CERAMIC	C1608 CH 1H 070D-T-A
C31	4030006980	S.CERAMIC	C1608 CH 1H 070D-T-A
C32	4030006970	S.CERAMIC	C1608 CH 1H 060D-T-A
C35	4030006910	S.CERAMIC	C1608 CH 1H 0R5C-T-A
C36	4030007010	S.CERAMIC	C1608 CH 1H 100D-T-A
C42	4030007070	S.CERAMIC	C1608 CH 1H 330J-T-A
C43	4030007030	S.CERAMIC	C1608 CH 1H 150J-T-A
C44	4030007060	S.CERAMIC	C1608 CH 1H 270J-T-A
C45	4030007010	S.CERAMIC	C1608 CH 1H 100D-T-A
C46	4030007050	S.CERAMIC	C1608 CH 1H 220J-T-A
C48	4030006900	S.CERAMIC	C1608 JB 1E 103K-T-A
C50	4030007020	S.CERAMIC	C1608 CH 1H 120J-T-A
C51	4030007020	S.CERAMIC	C1608 CH 1H 120J-T-A
C52	4030006930	S.CERAMIC	C1608 CH 1H 020C-T-A
C53	4030009540	S.CERAMIC	C1608 CH 1H 1R5B-T-A
C54	4030009350	S.CERAMIC	C1608 CH 1H 3R5B-T-A
C55	4030006850	S.CERAMIC	C1608 JB 1H 471K-T-A
C56	4030006910	S.CERAMIC	C1608 CH 1H 0R5C-T-A
C57	4030009540	S.CERAMIC	C1608 CH 1H 1R5B-T-A
C60	4510005430	S.ELECTROLYTIC	ECEV0JA220SR
C61	4030006960	S.CERAMIC	C1608 CH 1H 050C-T-A
C62	4030006900	S.CERAMIC	C1608 JB 1E 103K-T-A
C63	4610002150	S.TRIMMER	CTZ3S-10A-W1-AF
C64	4030009660	S.CERAMIC	C1608 JF 1C 224Z-T-A
C65	4030006850	S.CERAMIC	C1608 JB 1H 471K-T-A
C67	4030011600	S.CERAMIC	C1608 JB 1C 104KT-N
C68	4550006150	S.TANTALUM	ECST1CY105R
C69	4030006990	S.CERAMIC	C1608 CH 1H 080D-T-A
C70	4030006850	S.CERAMIC	C1608 JB 1H 471K-T-A
C72	4030006850	S.CERAMIC	C1608 JB 1H 471K-T-A
C73	4030011600	S.CERAMIC	C1608 JB 1C 104KT-N
C74	4030006850	S.CERAMIC	C1608 JB 1H 471K-T-A
C75	4030006850	S.CERAMIC	C1608 JB 1H 471K-T-A
C76	4030006850	S.CERAMIC	C1608 JB 1H 471K-T-A
C77	4030007050	S.CERAMIC	C1608 CH 1H 220J-T-A
C78	4030007110	S.CERAMIC	C1608 CH 1H 680J-T-A
C79	4510004630	S.ELECTROLYTIC	ECEV1CA100SR
C80	4030009660	S.CERAMIC	C1608 JF 1C 224Z-T-A
C81	4030008920	S.CERAMIC	C1608 JB 1C 473K-T-A
C82	4030011600	S.CERAMIC	C1608 JB 1C 104KT-N
C83	4030008680	S.CERAMIC	C2012 JF 1C 105Z-T-A
C84	4030006850	S.CERAMIC	C1608 JB 1H 471K-T-A
C85	4510004650	S.ELECTROLYTIC	ECEV1EA4R7SR
C86	4030011810	S.CERAMIC	C1608 JB 1A 224K-T-N
C87	4030011600	S.CERAMIC	C1608 JB 1C 104KT-N
C88	4510004650	S.ELECTROLYTIC	ECEV1EA4R7SR
C89	4030009880	S.CERAMIC	C1608 JB 1H 682K-T-A
C90	4030006900	S.CERAMIC	C1608 JB 1E 103K-T-A
C91	4030008920	S.CERAMIC	C1608 JB 1C 473K-T-A
C92	4030006900	S.CERAMIC	C1608 JB 1E 103K-T-A
C93	4030006900	S.CERAMIC	C1608 JB 1E 103K-T-A
C95	4030006850	S.CERAMIC	C1608 JB 1H 471K-T-A
C96	4030006850	S.CERAMIC	C1608 JB 1H 471K-T-A
C100	4030007050	S.CERAMIC	C1608 CH 1H 220J-T-A
C102	4030009540	S.CERAMIC	C1608 CH 1H 1R5B-T-A
C201	4030006850	S.CERAMIC	C1608 JB 1H 471K-T-A
C202	4030007050	S.CERAMIC	C1608 CH 1H 220J-T-A
C203	4030007050	S.CERAMIC	C1608 CH 1H 220J-T-A
C204	4030006990	S.CERAMIC	C1608 CH 1H 080D-T-A
C205	4030006860	S.CERAMIC	C1608 JB 1H 102K-T-A
C206	4030006860	S.CERAMIC	C1608 JB 1H 102K-T-A
C207	4030006990	S.CERAMIC	C1608 CH 1H 080D-T-A
C208	4030007000	S.CERAMIC	C1608 CH 1H 090D-T-A
C209	4030006970	S.CERAMIC	C1608 CH 1H 060D-T-A
C210	4030006980	S.CERAMIC	C1608 CH 1H 070D-T-A

S.=Surface mount

[RF UNIT]

REF NO.	ORDER NO.	DESCRIPTION		
C211	4030006860	S.CERAMIC	C1608 JB 1H 102K-T-A	
J1	6910007660	CONNECTOR	IMSA-9210B-1-02T	
J2	6510018170	S.CONNECTOR	4-175643-4	
W4	7030003860	S.JUMPER	ERJ3GE JPW V	
W5	7030003860	S.JUMPER	ERJ3GE JPW V	
W6	7030003860	S.JUMPER	ERJ3GE JPW V	
W8	7030003860	S.JUMPER	ERJ3GE JPW V	
W201	7030003860	S.JUMPER	ERJ3GE JPW V	
W202	7030003860	S.JUMPER	ERJ3GE JPW V	
EP1	0910050351	PCB	B 5162A	[ITA], [ITA-1]
	0910050781	PCB	B 5162A	[CSA], [CSA-1]

S.=Surface mount

SECTION 7 MECHANICAL PARTS AND DISASSEMBLY

7-1 CABINET PARTS

[CHASSIS PARTS]

REF. NO.	ORDER NO.	DESCRIPTION	QTY.
SP1	2510000960	Speaker K036NA500-26A27	1
EP1	3310002090	Antenna 2045ANT	1
MP1	8210015181	Panel 2045 Front Panel-1 [ITA], [CSA]	1
	8210016101	Panel 2045 Front Panel (A)-1 [ITA-1], [CSA-1]	1
MP2	8210015191	Panel 2045 Rear Panel-1 [ITA], [CSA]	1
	8210016111	Panel 2045 Rear Panel (A)-1 [ITA-1], [CSA-1]	1
MP3	8110006400	Cover 2045 Rear Cover [ITA], [CSA]	1
	8110006720	Cover 2045 Rear Cover (A) [ITA-1], [CSA-1]	1
MP4	8110006410	Cover 2045 Lock Cover [ITA], [CSA]	1
	8110006730	Cover 2045 Lock Cover (A) [ITA-1], [CSA-1]	1
MP5	8310042680	Plate 2045 Window Plate	1
MP7	8210015220	Panel 2045 Reflector	1
MP8	8610010570	Knob N-265	1
MP9	8930045192	Seal 2045 Top Seal-2	1
MP10	8930045230	Key 2045 4-Key	1
MP11	8930045200	Button 2045 PTT Button	1
MP12	8930046990	Seal 2045 Main Seal (A)	1
MP13	8930045220	Seal 2045 BATT Seal	1
MP14	8930046280	Terminal 2045 ANT Termainal	1
MP20	8830001370	Screw 2045 VR Nut	1
MP22	8930045750	Seal O-ring (X)	1
MP23	8830000110	Screw Nut M4	1
MP24	8810009560	Screw PH BO 2x6 ZK (BT)	4
MP25	8810008640	Screw FH BO 2x4 NI-ZU (BT)	2
MP30	8810008990	Screw PH BO 2x10 ZK (BT)	1

[MAIN UNIT]

REF. NO.	ORDER NO.	DESCRIPTION	QTY.
DS2	5030001580	LCD LD-BU10185J	1
EP1	8930045510	LCD contact SRCN-2045-SP-N-W	1

[RF UNIT]

REF. NO.	ORDER NO.	DESCRIPTION	QTY.
MP1	8510011570	Case 2045 VCO Case	1

Screw abbreviations

A, B0, BT: Self-tapping
PH: Pan head
FH: Flat head
BiH: Bind head
NI: Nickel
SUS: Stainless
ZK: Black

7-2 ACCESSORIES

REF. NO.	ORDER NO.	DESCRIPTION	QTY.
MP1	8930045331	2045 Belt clip-1	1
MP2	8820001040	2045 Screw	1

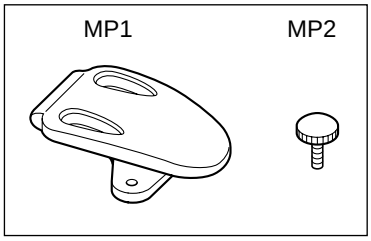

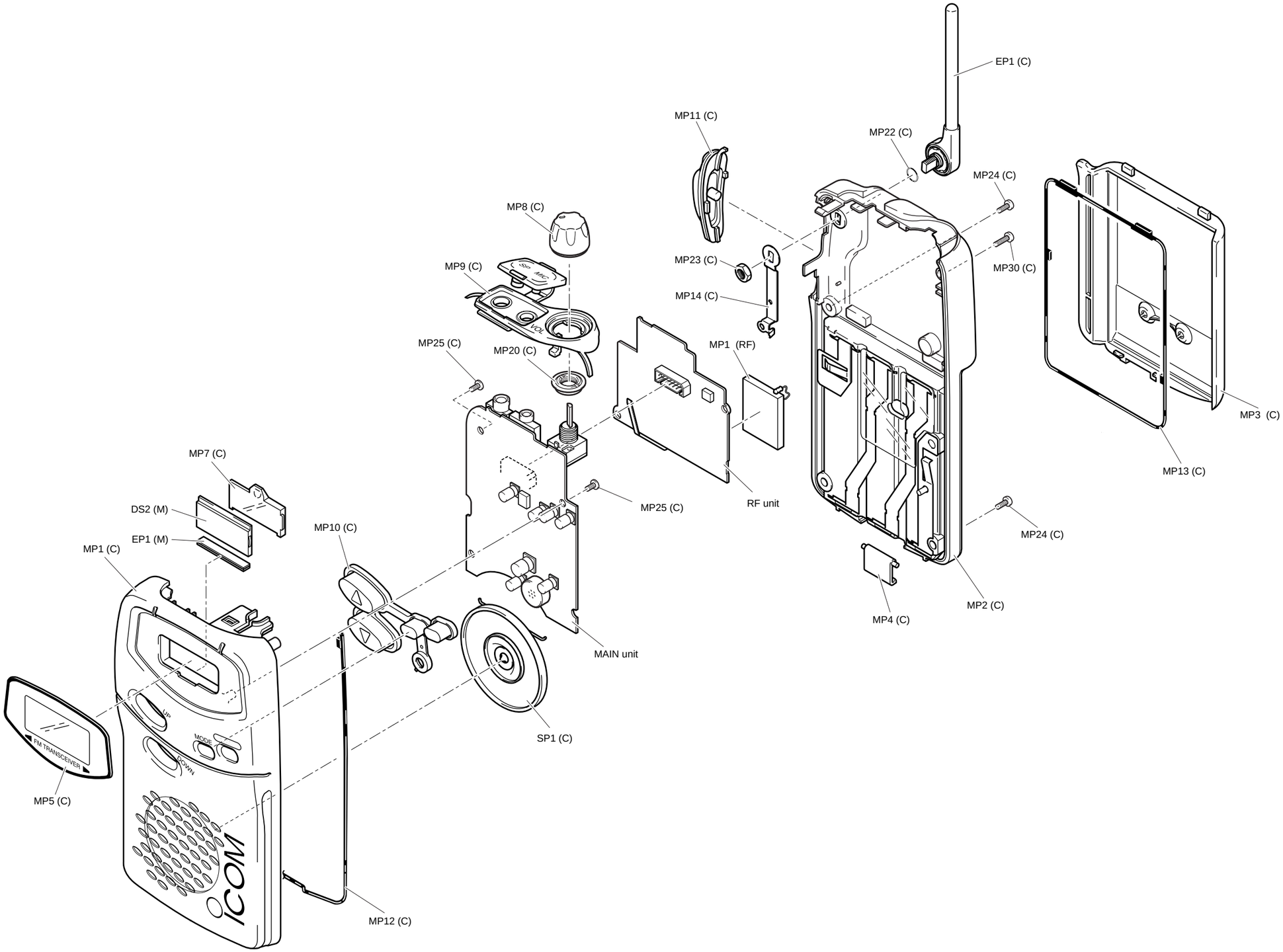

UNIT abbreviation (C): CHASSIS PARTS, (RF): RF UNIT, (M): MAIN UNIT

SECTION 8 SEMI-CONDUCTOR INFORMATION

• TRANSISTOR AND FET'S

2SA1362 GR (Symbol: AEG) 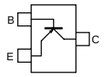	**2SA1586 GR** (Symbol: SG) 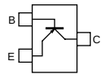	**2SB798 DK** (Symbol: DK) 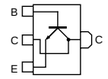	**2SC3356 R24** (Symbol: R24) 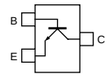	**2SC4081 S** (Symbol: BS) 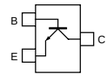
2SC4213 B (Symbol: AB) 	**2SC4215 O** (Symbol: QO) 	**2SC4226 R25** (Symbol: R25) 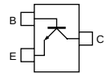	**2SC4228 R44** (Symbol: R44) 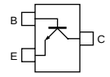	**2SC5108 Y** (Symbol: MC) 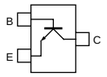
2SC5194 (Symbol: T88) 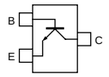	**2SJ144 Y** (Symbol: VX) 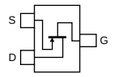	**2SK1829** (Symbol: K1) 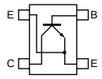	**DTA114 EU** (Symbol: 16) 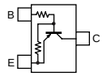	**DTA144 EU** (Symbol: 16) 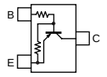
DTC114 EU (Symbol: 14) 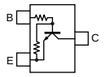	**MRF9745** (Symbol: M745) 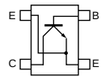	**UMZ1N** (Symbol: Z1) 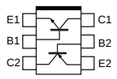	**UMZ2N** (Symbol: Z2) 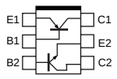	**UN5119** (Symbol: 6K) 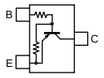
UN9215 (Symbol: 8E) 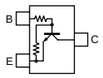				

• DIODES

1SS355 (Symbol: A) 	**1SV284** (Symbol: TL) 	**MA77** (Symbol: 4B) 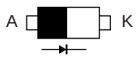	**MA2S077** (Symbol: S) 	**MA2S111** (Symbol: A)
MA2S728 (Symbol: B) 				

SECTION 9 BOARD LAYOUTS

9-1 MAIN UNIT

- **TOP VIEW (IC-4008A)**

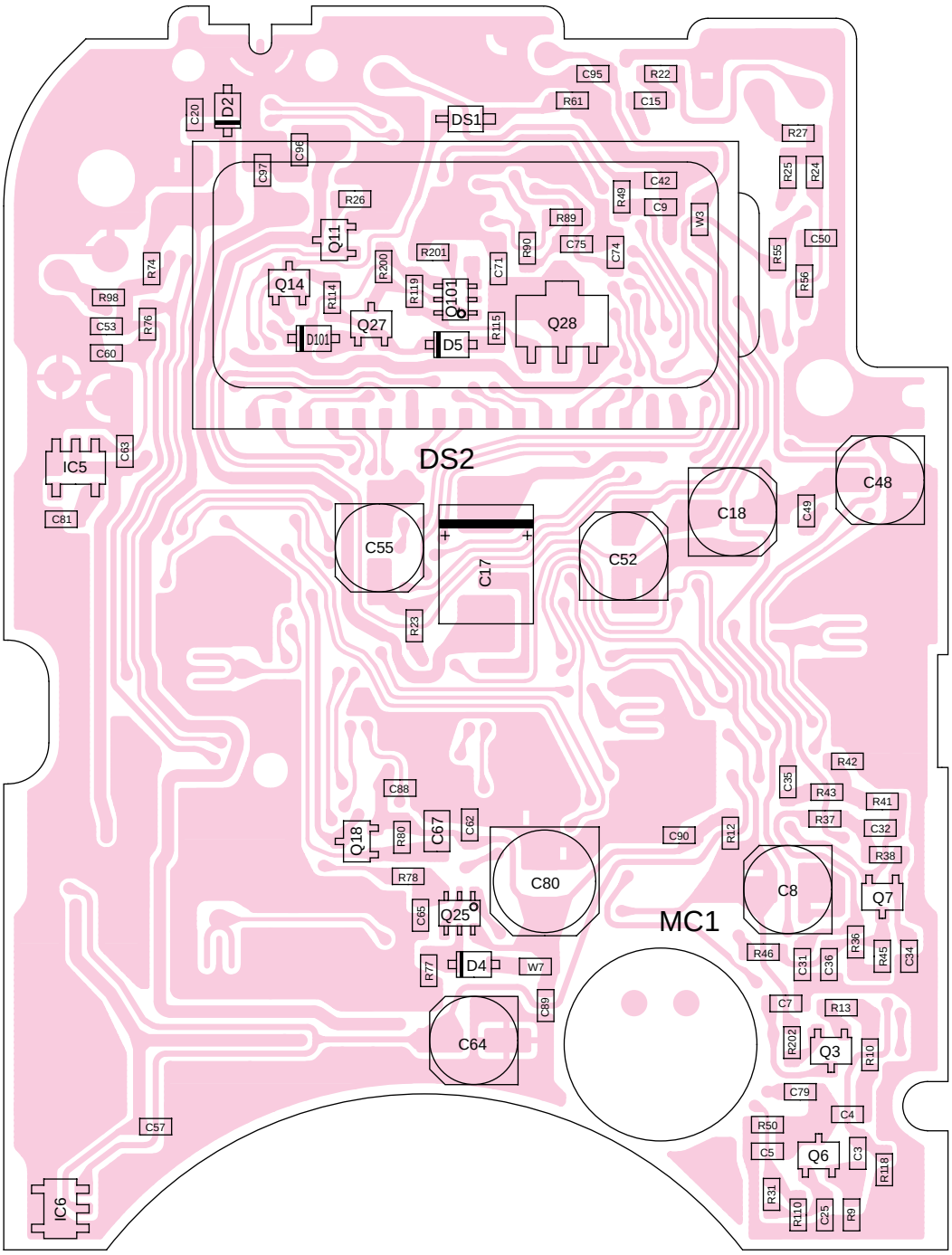

● **BOTTOM VIEW (IC-4008A)**

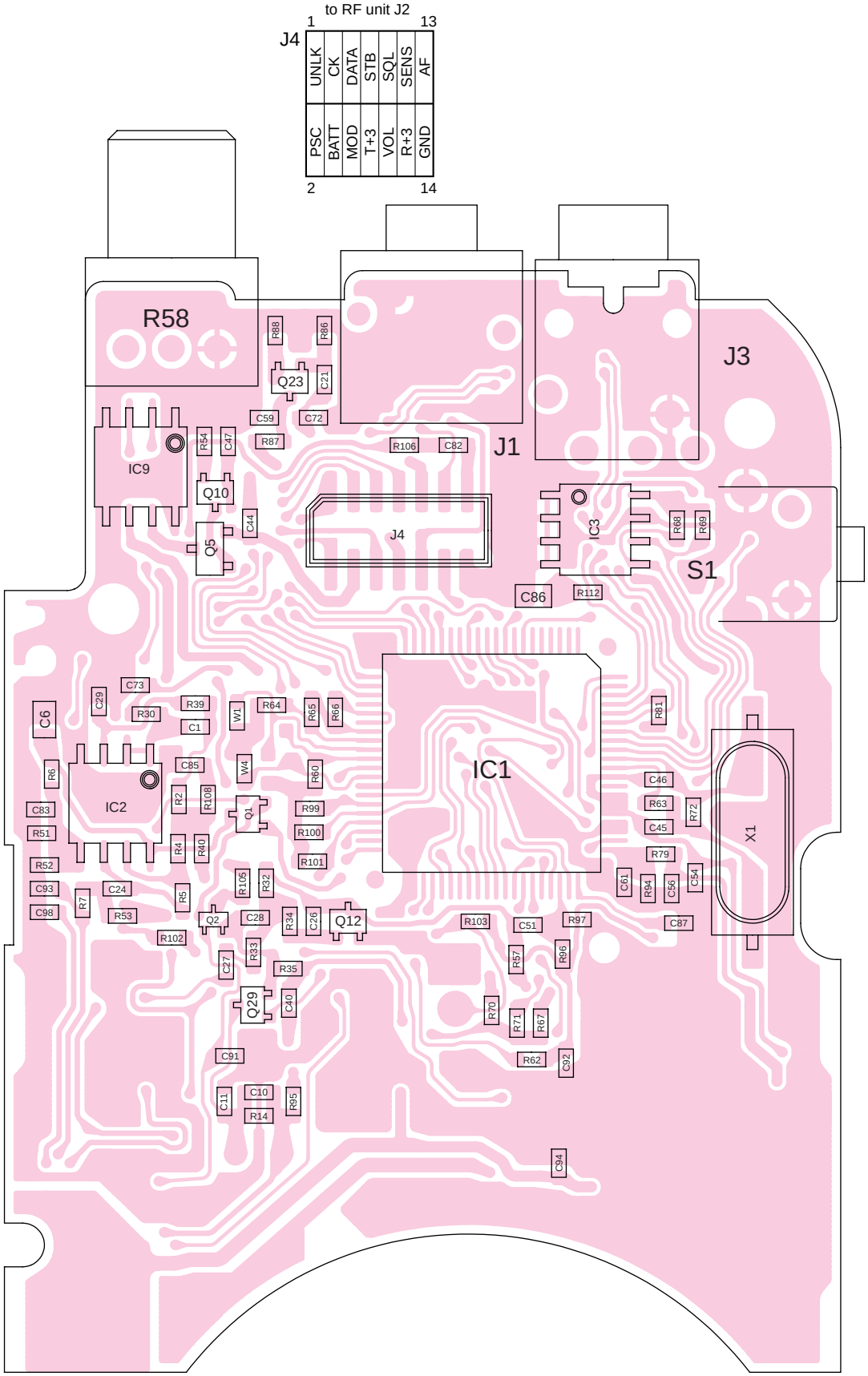

● TOP VIEW (IC-4008MKⅡ)

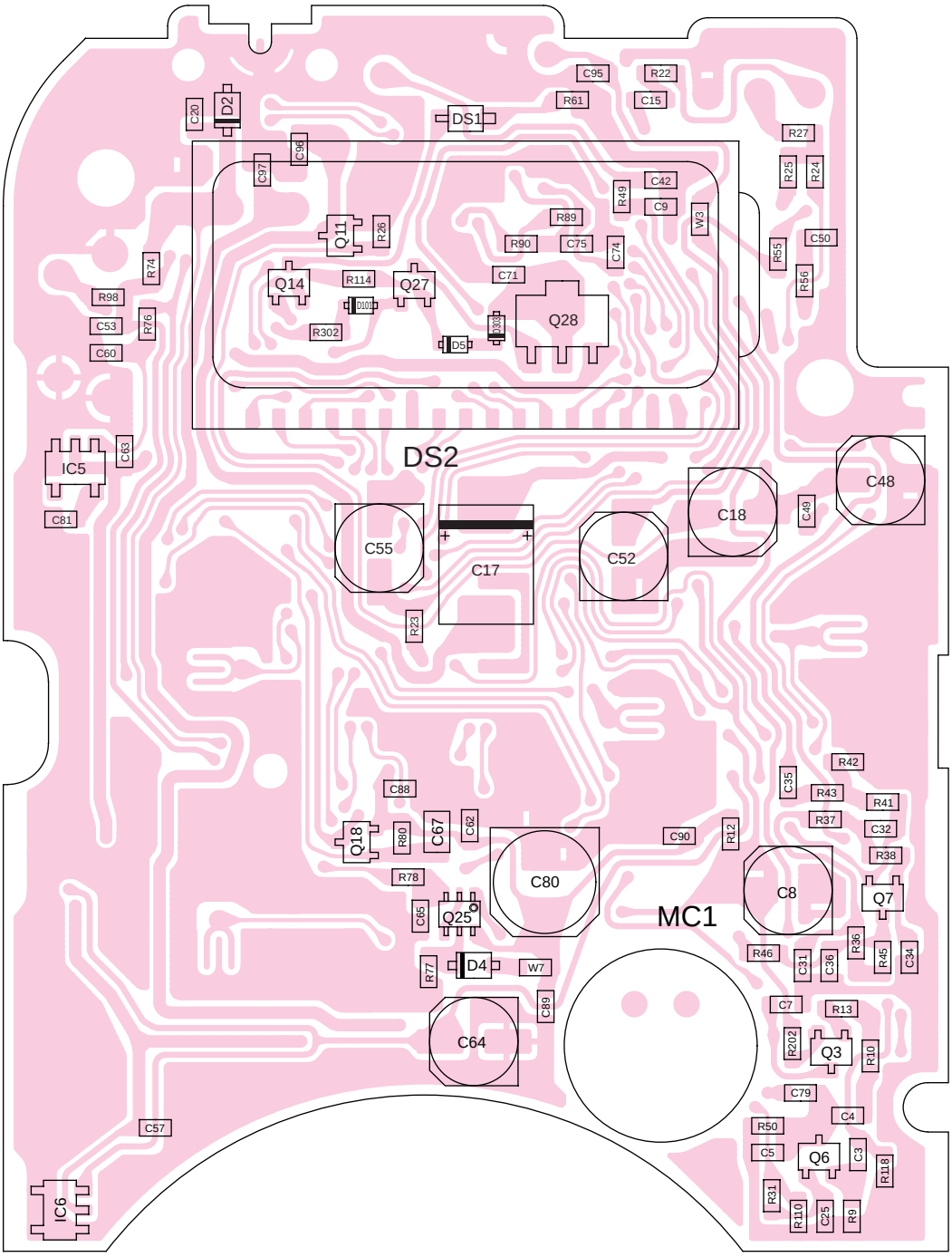

● BOTTOM VIEW (IC-4008MKⅡ)

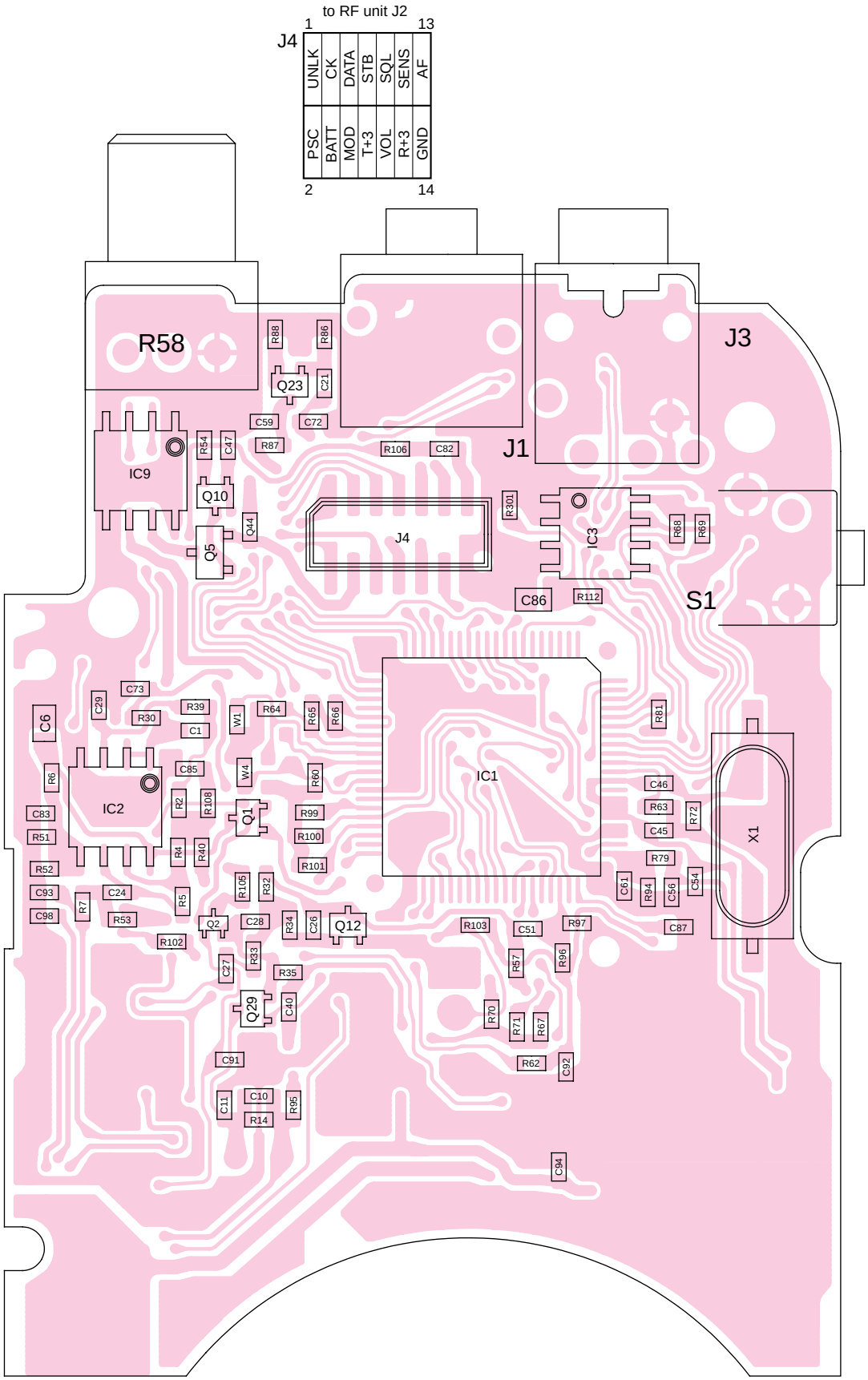

9-2 RF UNIT

- **TOP VIEW**

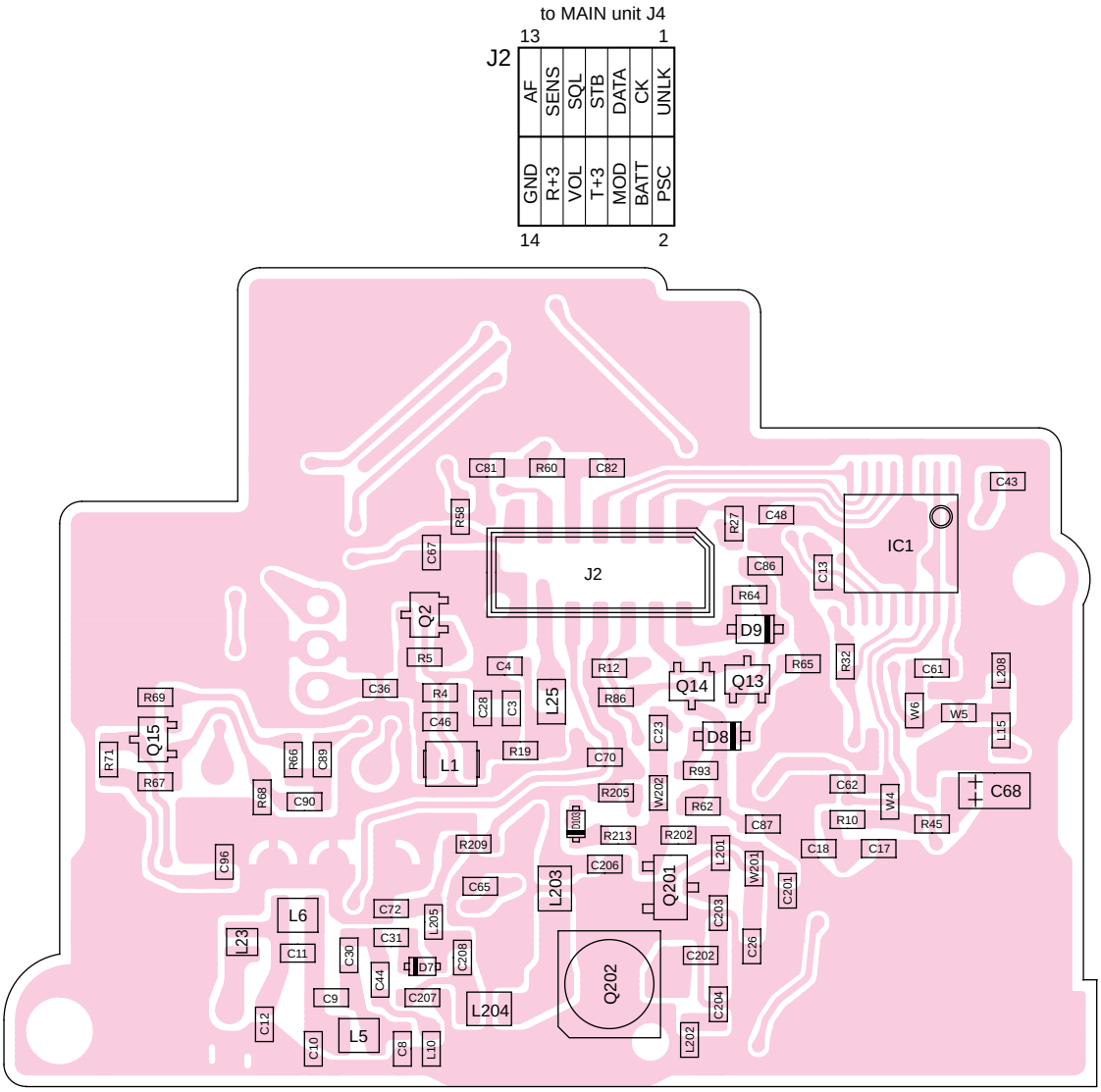

● **BOTTOM VIEW**

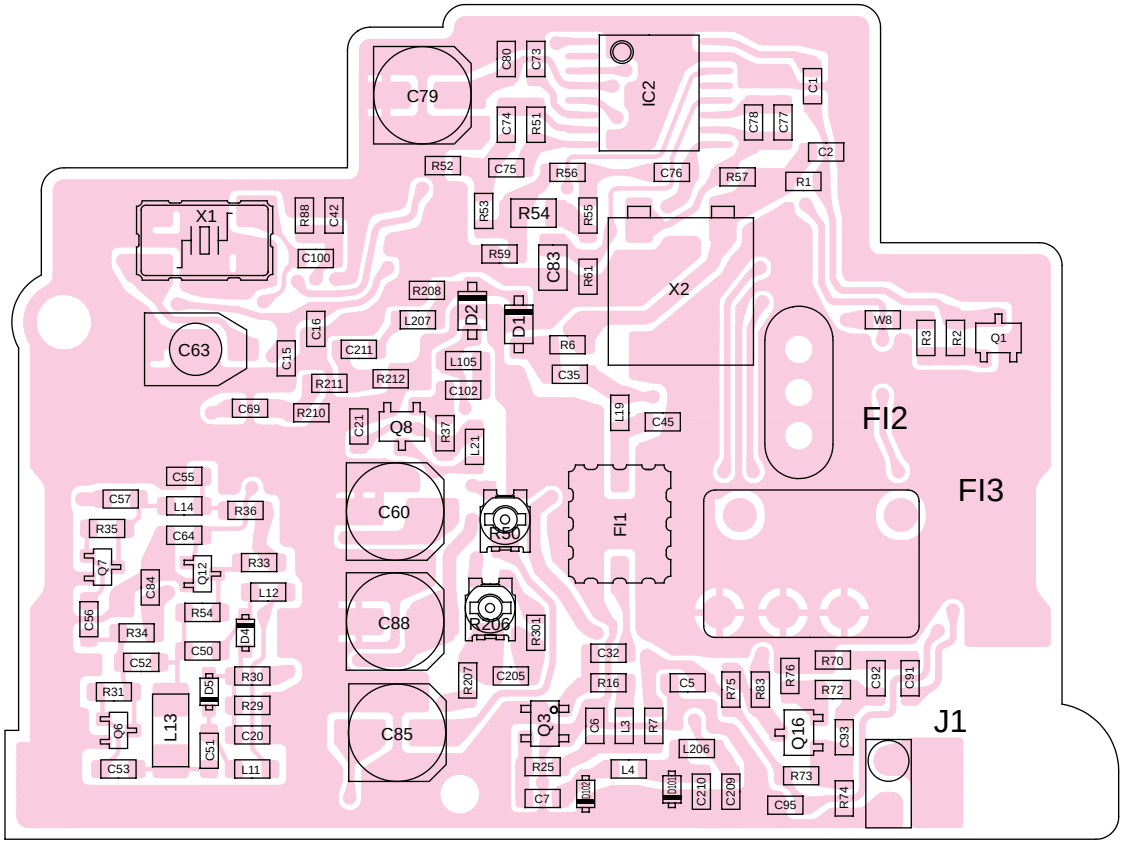
C79
C80
C73
IC2
C1
C74
R51
C78
C77
C2
R52
C75
R56
C76
R57
R1
X1
R88
C42
R53
R54
R55
C100
R59
C83
R61
X2
R208
D2
D1
W8
R3
R2
Q1
C63
C16
L207
C15
C211
R6
L105
R212
C35
R211
C102
C69
R210
C21
Q8
R37
L21
L19
C45
FI2
FI3
C55
C57
L14
R36
C60
R50
FI1
R35
C64
Q7
Q12
R33
C84
L12
C56
R54
R206
C88
R301
R34
D4
C50
C32
C52
R30
R207
C205
R16
C5
R75
R83
R76
R70
R72
C92
C91
R31
D5
R29
L13
C6
C20
C85
Q3
C6
L3
R7
Q16
C93
J1
C53
C51
L11
R25
L4
L206
R73
C7
D102
D101
C210
C209
C95
R74

SECTION 10 BLOCK DIAGRAM

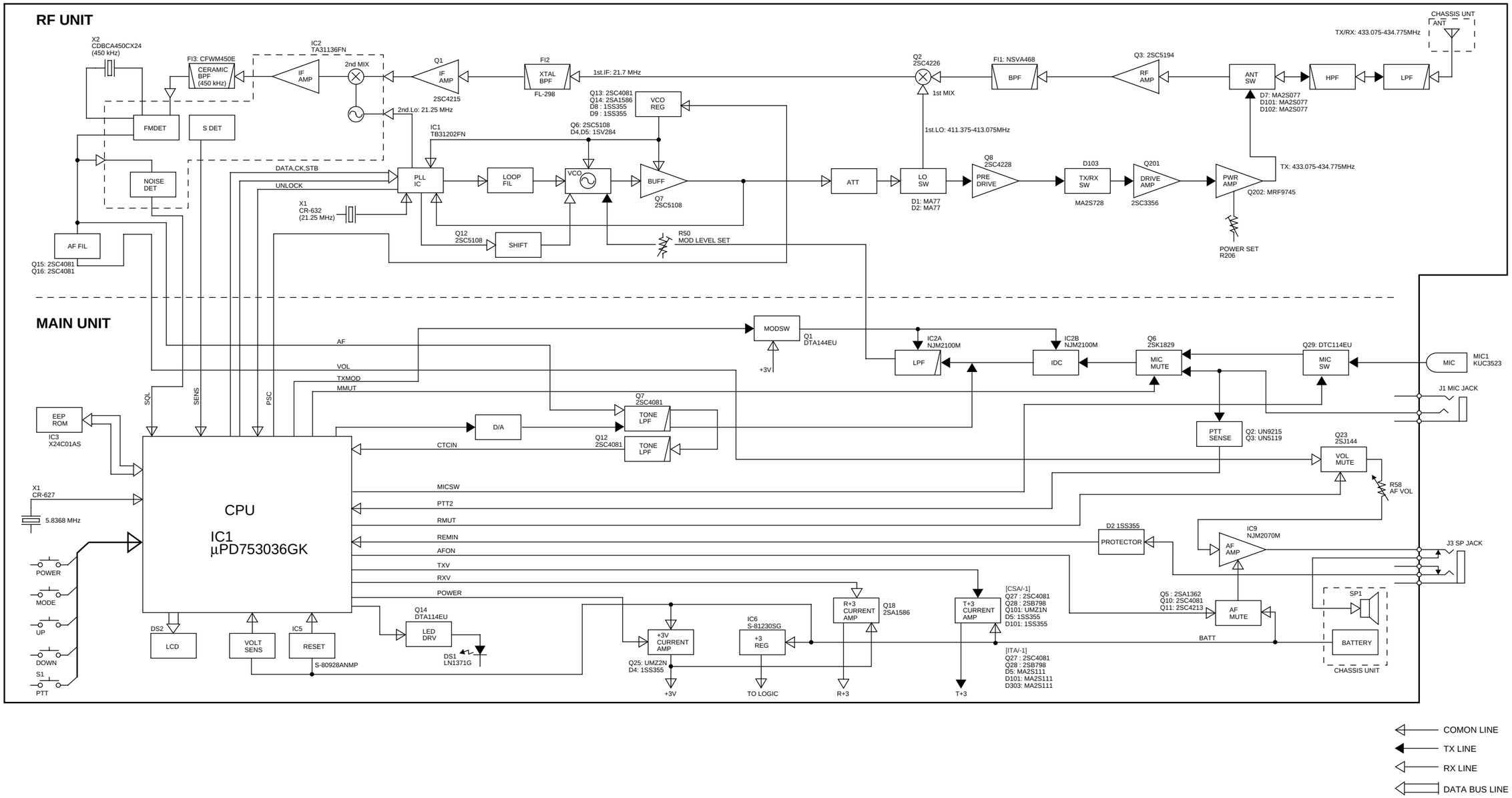

SECTION 11 VOLTAGE DIAGRAM

11-1 MAIN UNIT

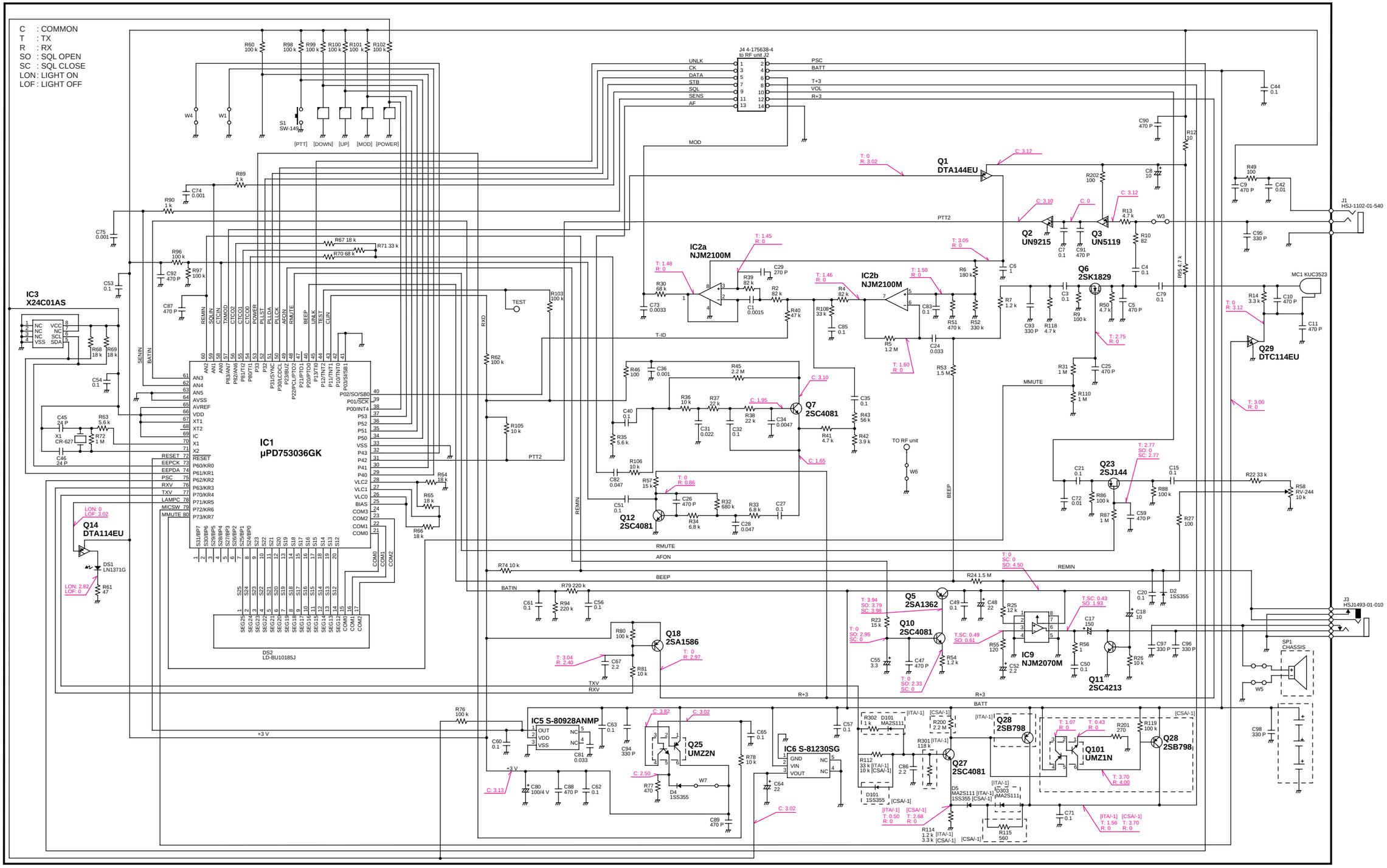

11-2 RF UNIT

C: COMMON
T: TX
R: RX

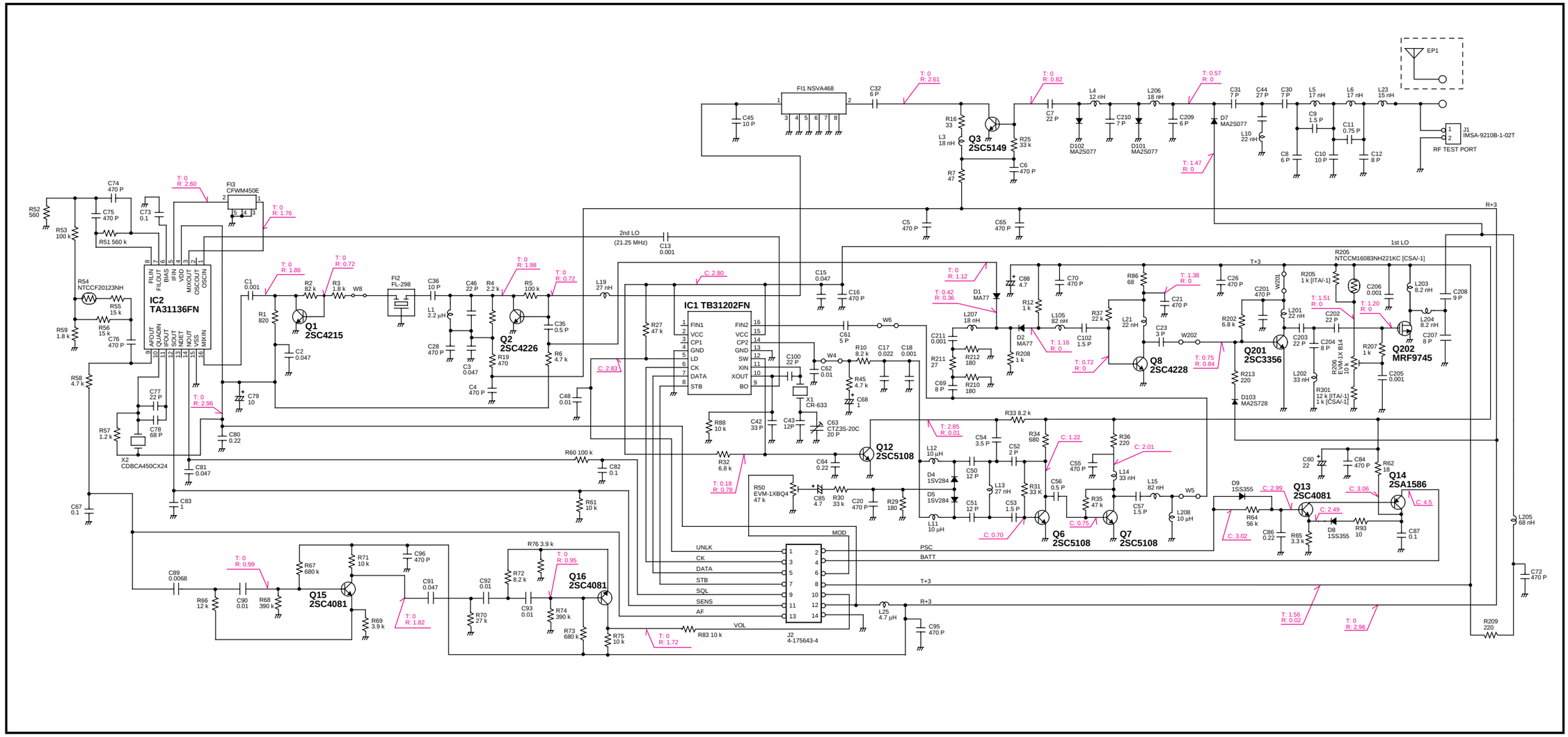

Icom Inc.

6-9-16, Kamihigashi, Hirano-ku, Osaka 547-0002, Japan
Phone : 06 6793 5302
Fax : 06 6793 0013

Icom America Inc.

<Corporate Headquarters>
2380 116th Avenue N.E., Bellevue, WA 98004, U.S.A.
Phone : (425) 454-8155 Fax : (425) 454-1509
URL : http://www.icomamerica.com
<Customer Service>
Phone : (425) 454-7619

Icom Canada

A Division of Icom America Inc.
3071 #5 Road, Unit 9, Richmond, B.C., V6X 2T4, Canada
Phone : (604) 273-7400 Fax : (604) 273-1900

Icom (Australia) Pty. Ltd.

A.C.N. 006 092 575
290-294 Albert Street, Brunswick, Victoria, 3056, Australia
Phone : 03 9387 0666 Fax : 03 9387 0022
URL : http://www.icom.net.au

Asia Icom Inc.

6F No. 68, Sec. 1 Cheng-Teh Road, Taipei, Taiwan R.O.C.
Phone : (02) 2559 1899 Fax : (02) 2559 1874

Icom (Europe) GmbH

Communication Equipment
Himmelgeister Str. 100, D-40225 Düsseldorf, Germany
Phone : 0211 346047 Fax : 0211 333639
URL : http://www.icomeurope.com

Icom Spain S.L.

Crta. de Gracia a Manresa Km. 14,750
08190 Sant Cugat del Valles Barcelona, SPAIN
Phone : (93) 589 46 82 Fax : (93) 589 04 46
URL : http://www.icomspain.com

Icom (UK) Ltd.

Unit 9, Sea St., Herne Bay, Kent, CT6 8LD, U.K.
Phone : 01227 741741 Fax : 01227 741742
URL : http://www.icomuk.co.uk

Icom France S.a

Zac de la Plaine, Rue Brindejonc des Moulinais
BP 5804, 31505 Toulouse Cedex, France
Phone : 561 36 03 03 Fax : 561 36 03 00
URL : http://www.icom-france.com

Count on us!

Icom Inc.
6-9-16, Kamihigashi, Hirano-ku, Osaka, 547-0002, Japan

A-5505I-S
Printed in Japan
© 1998 by Icom Inc.