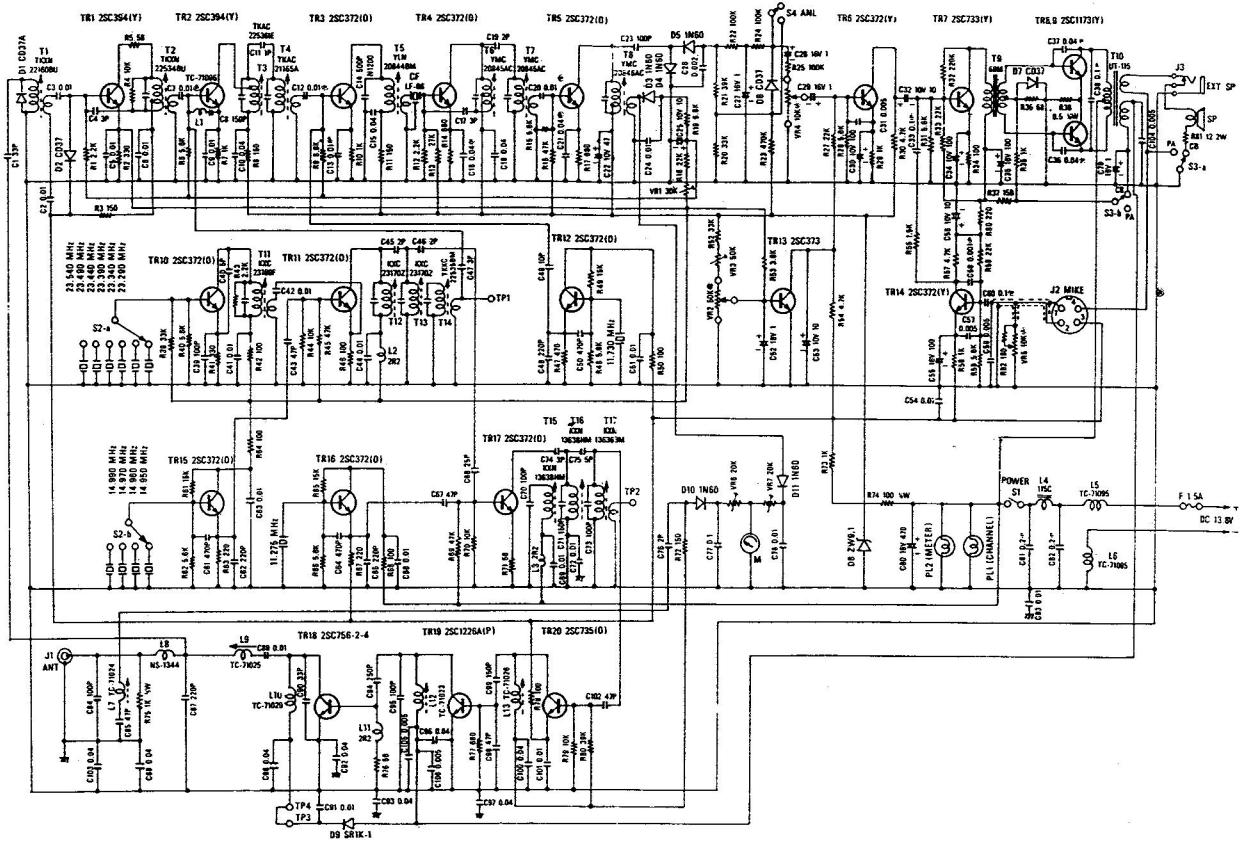COBRA 21 DYNASCAN